Figure 1 Fuse Blown

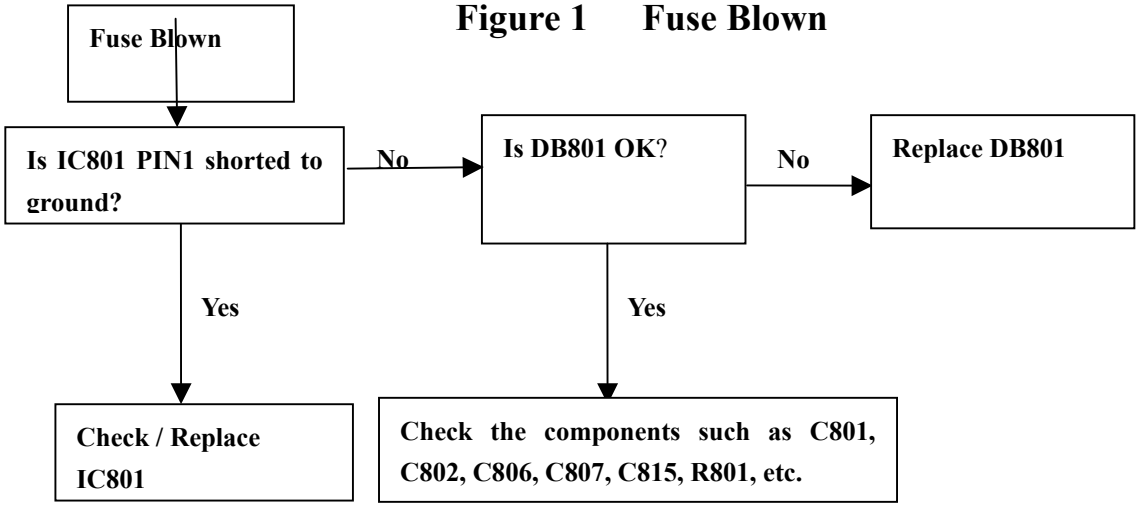

Figure 2 No Raster, Abnormal +B

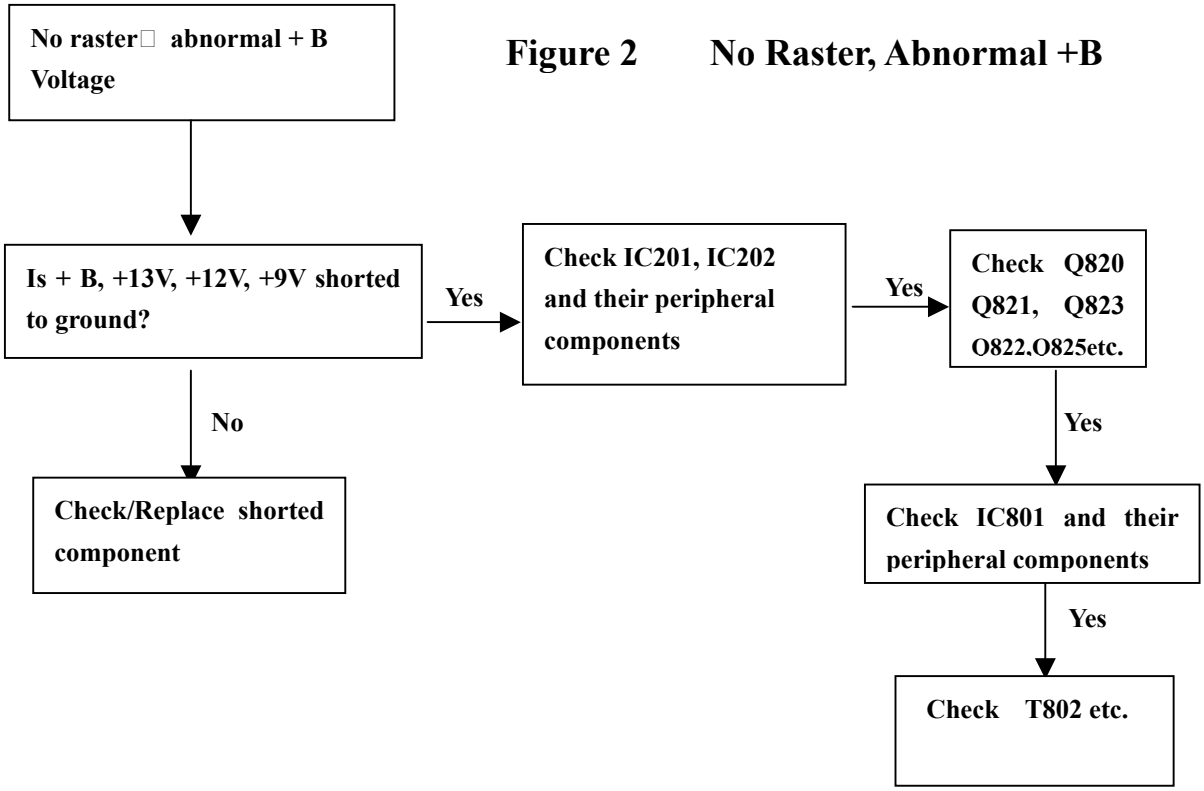

Figure 3 No Raster, +B OK

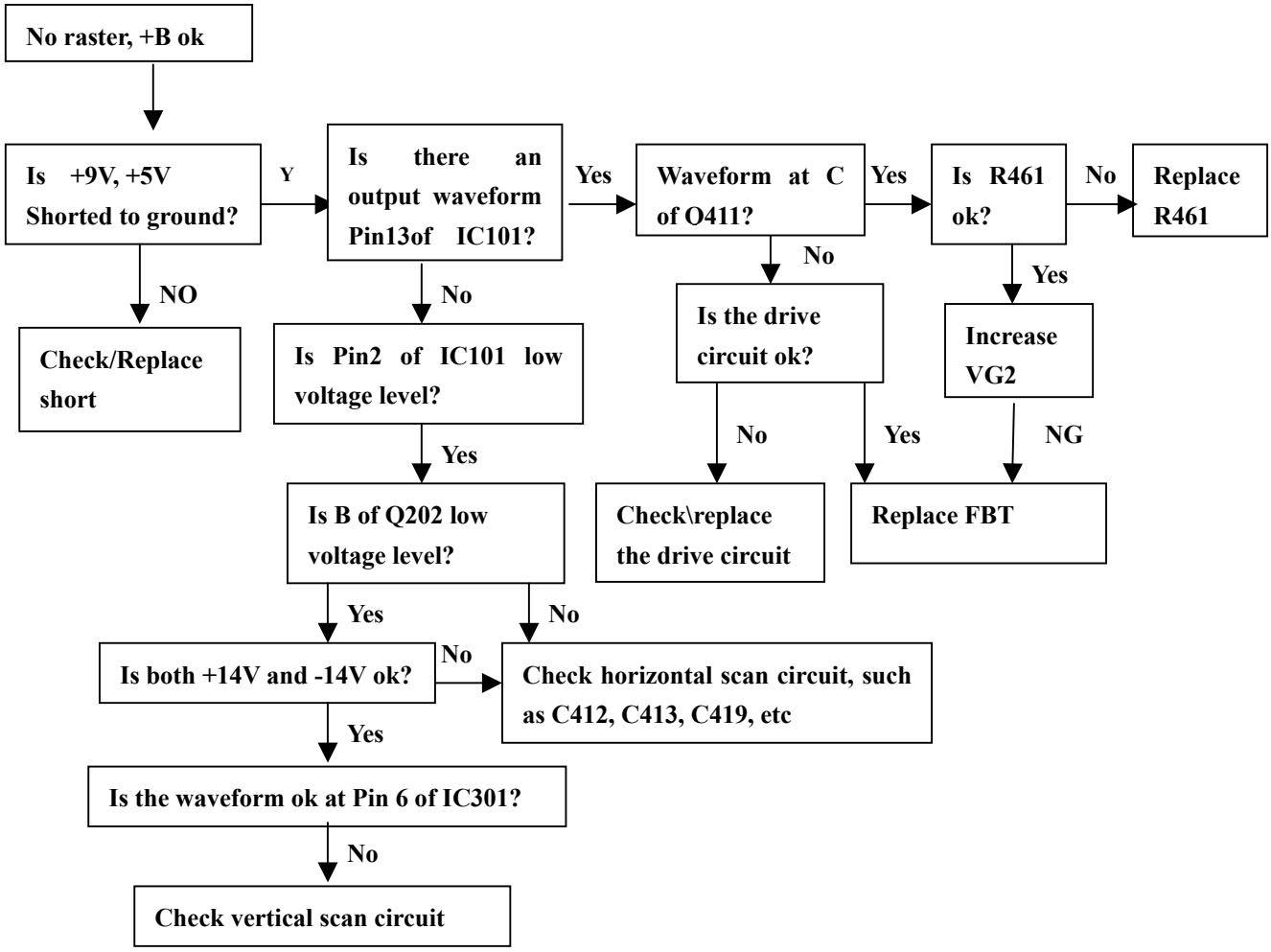

Figure 4 No Picture dense noise dots

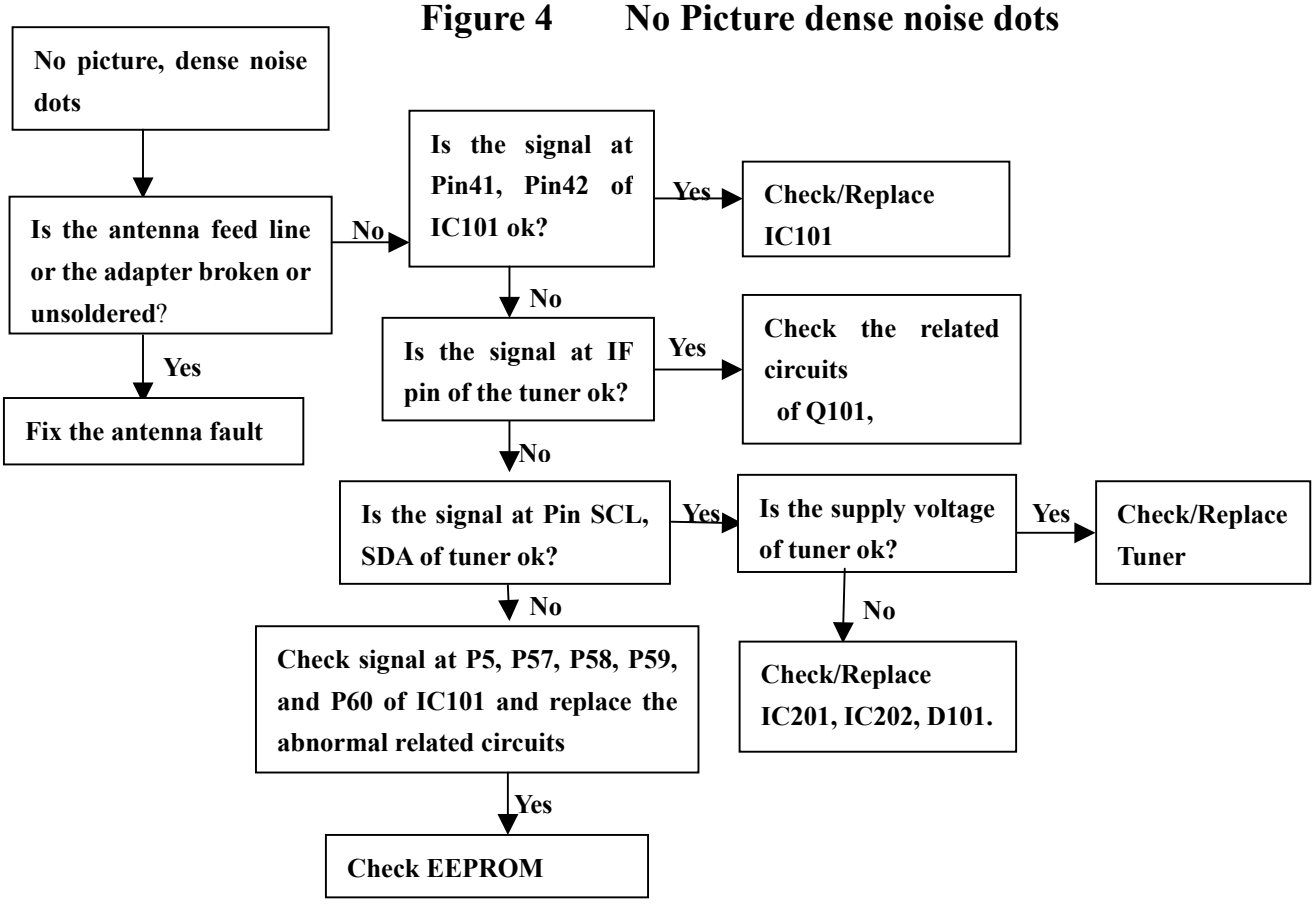

Figure 5 Sparse Noise

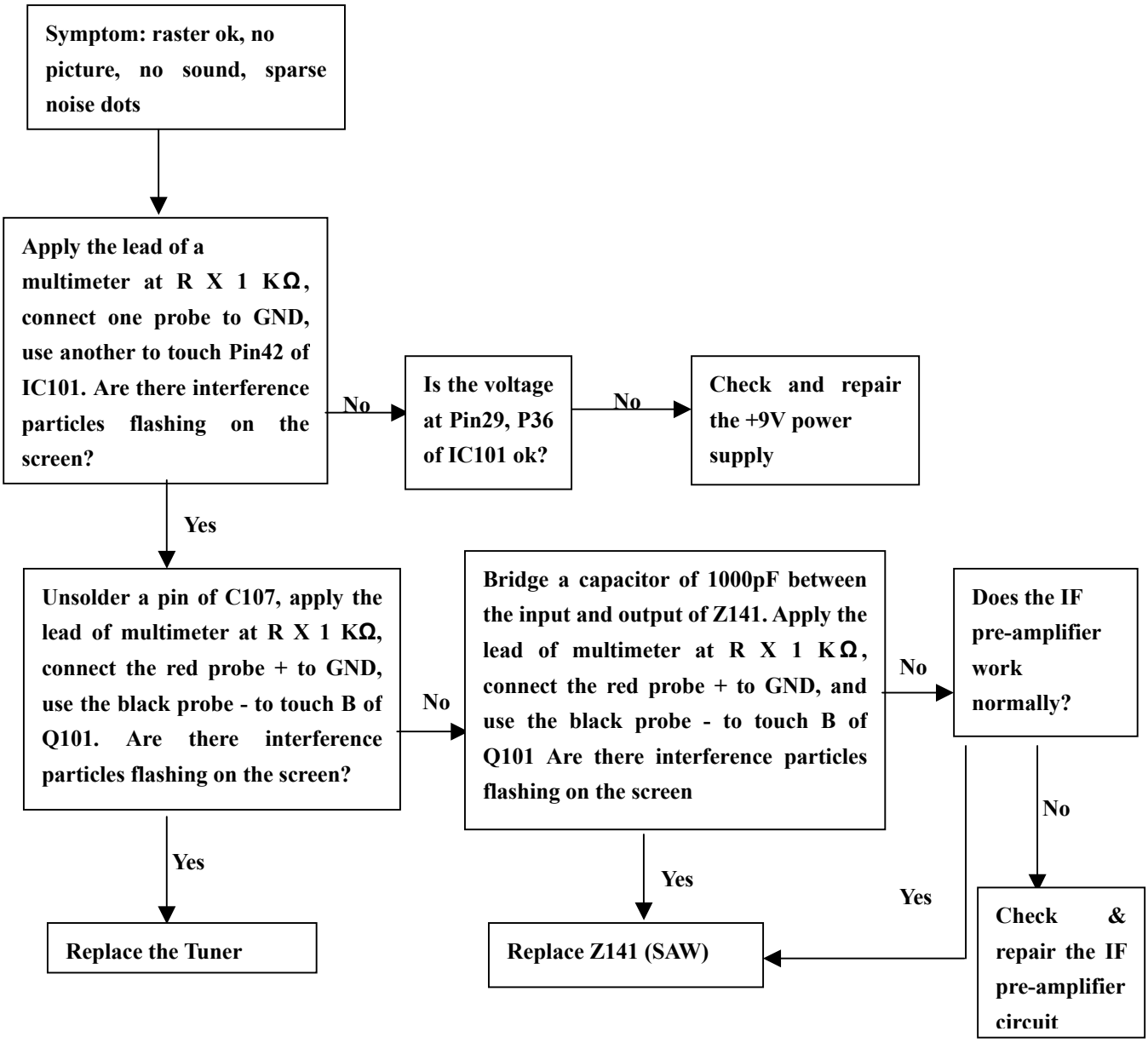

Figure 6 No Sound

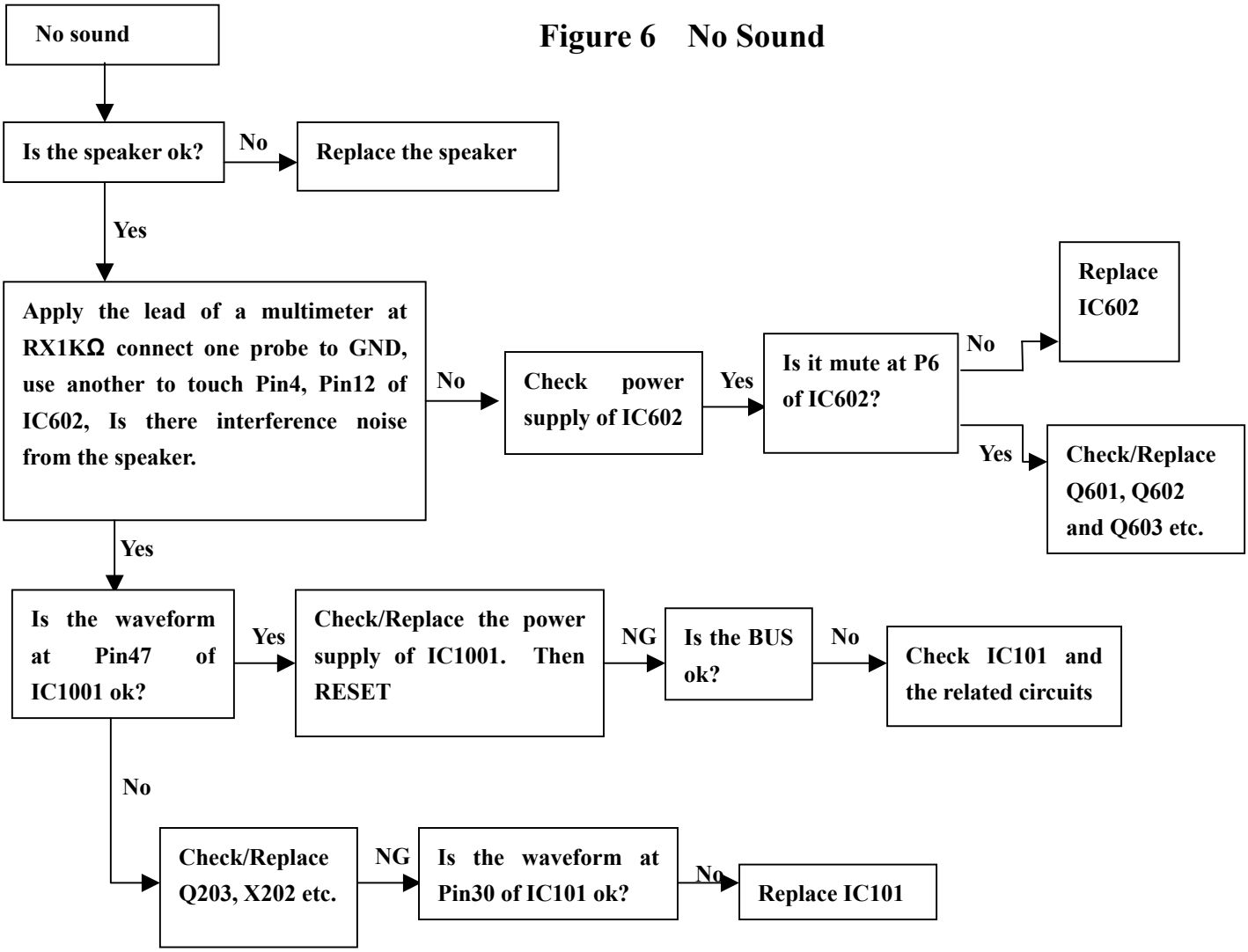

Figure 7 No Picture

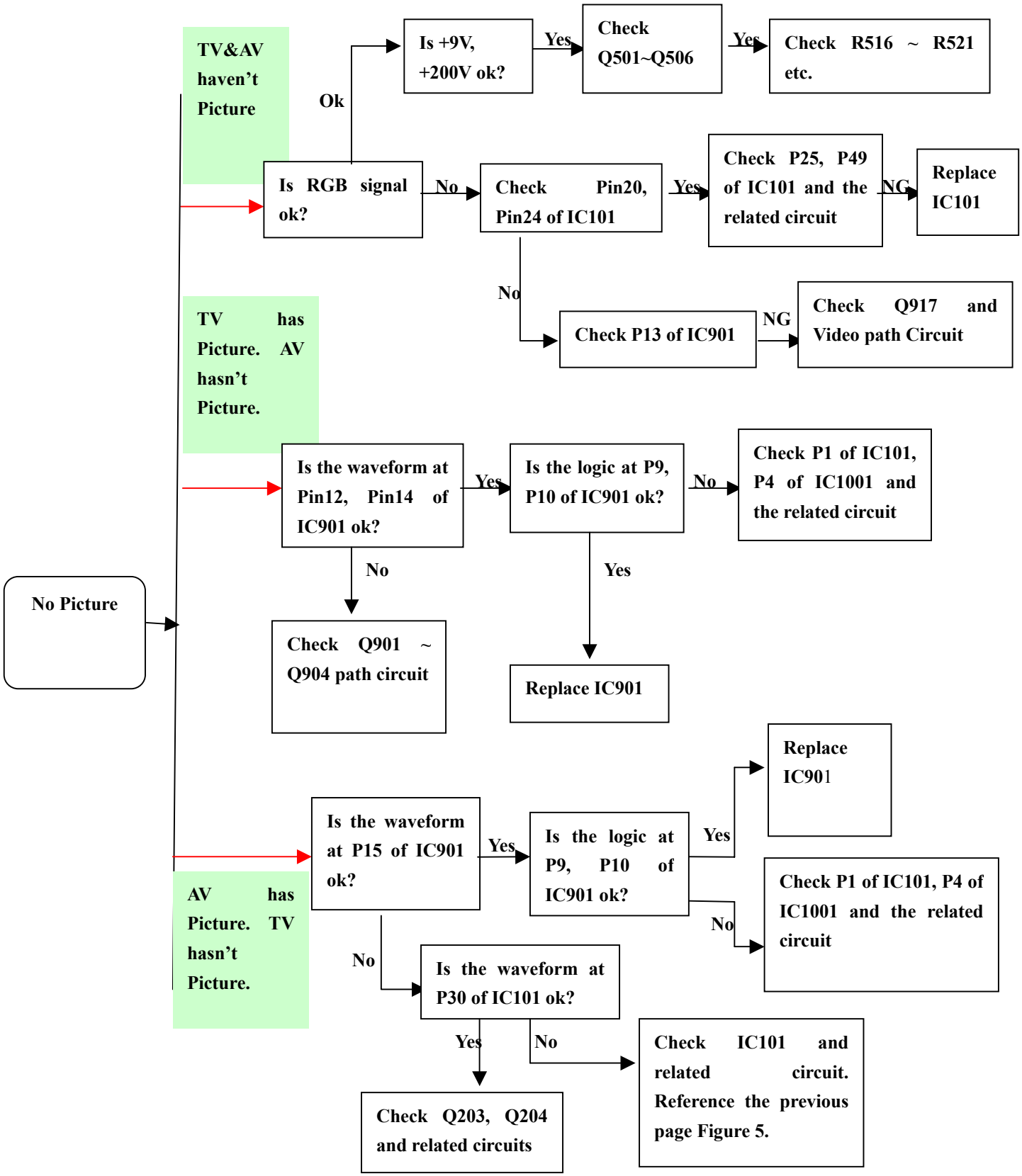

Figure 8 No Vertical Scanning

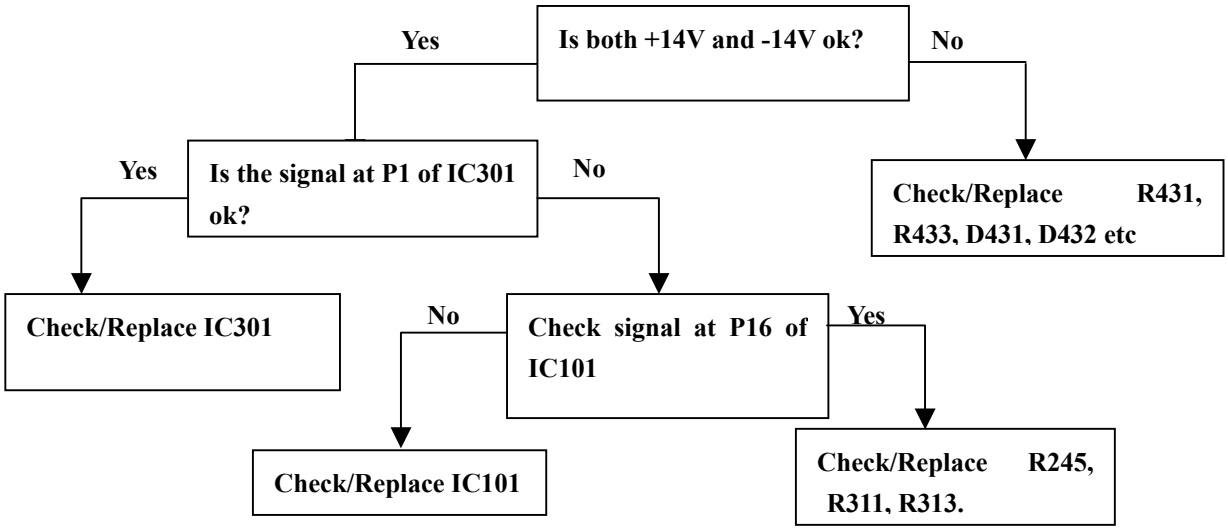

Figure 9 No Tuning

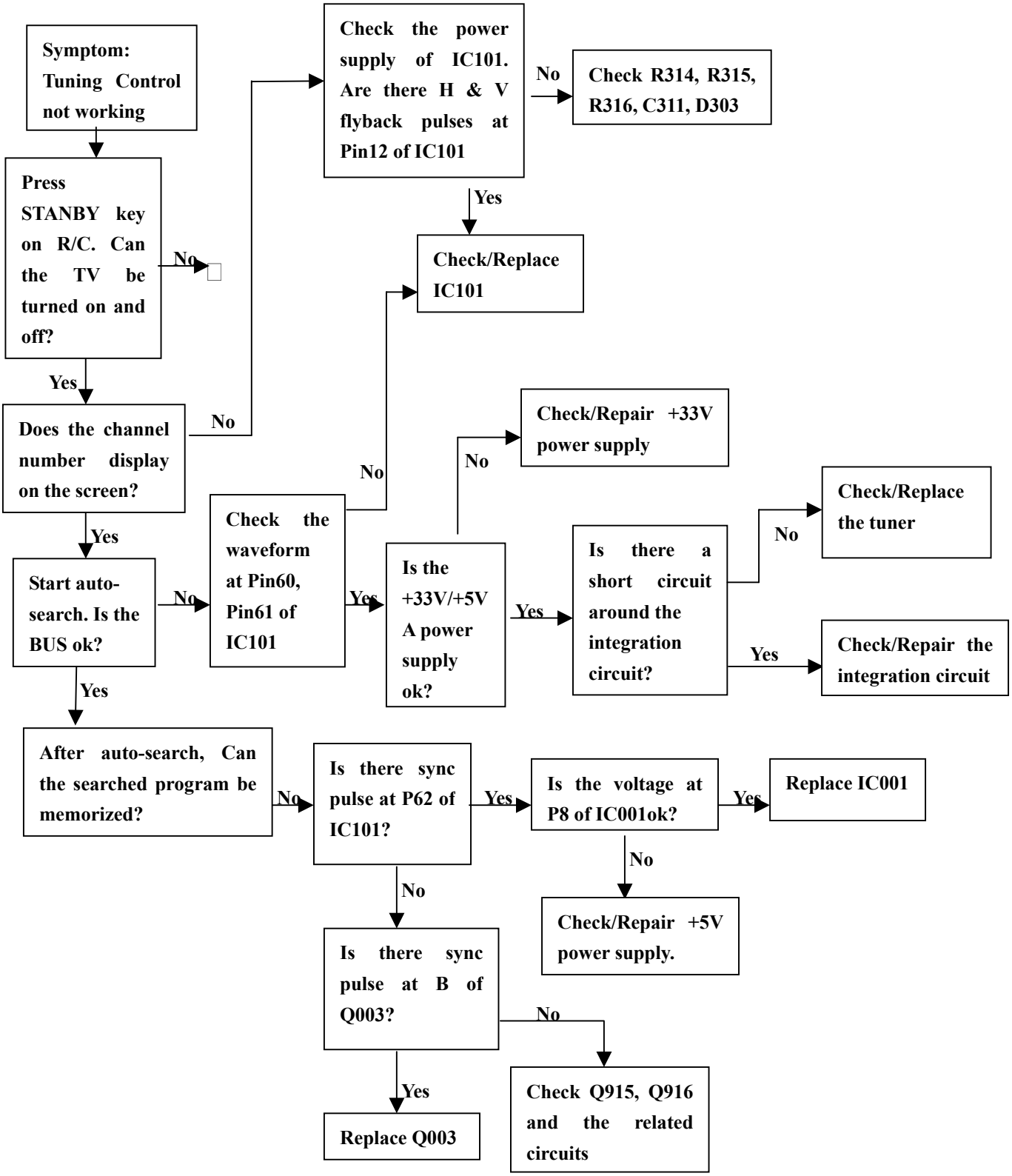

Figure 10 Tuning Control not working

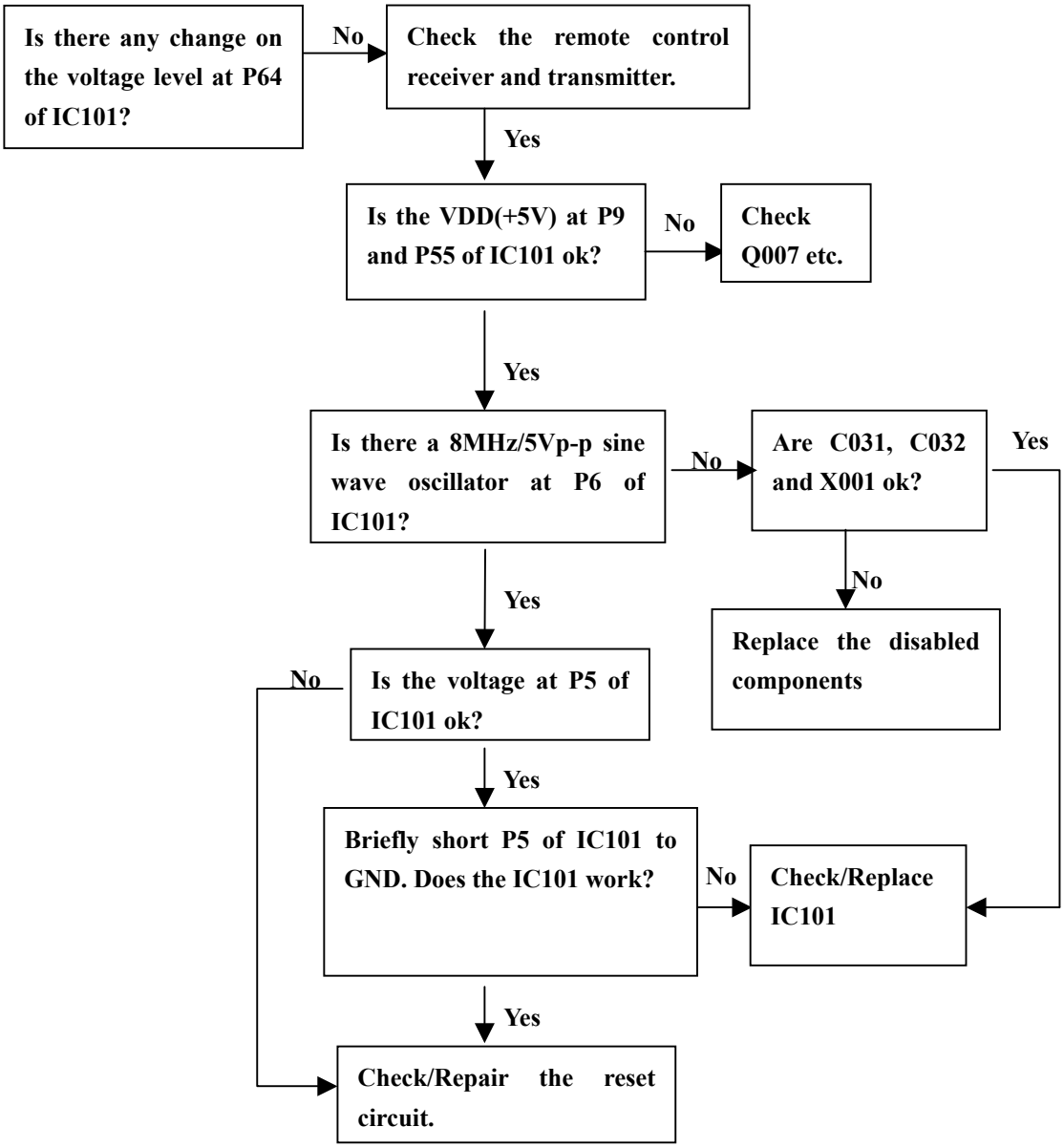

ALIGNMENTS

Operating Conditions

Unless otherwise noted, the following conditions must be observed when aligning this chassis:

Chassis must be operated from a 120VAC isolation transformer, with line voltage set to 120VAC (±2.0V).

Picture controls (color, brightness etc.) must be set to midrange.

Procedures must be performed in the sequence given.

A 10X probe must be used for oscilloscope and frequency measurements.

The audio output leads must not be shorted together or to ground with the chassis on.

All video signals must have -40 IRE sync tips unless specified otherwise.

Chassis AC power must be removed for 10 seconds before disconnecting any cable.

A 3-minute warm-up is required for chassis or module related alignments. A 15-minute warm-up is required for Kine related alignments.

Required Test Equipment

- Dual-Trace Oscilloscope
- Digital Voltmeter
- Frequency Counter
- Audio Signal Generator
- NTSC Signal Generator (B&K 1249, or equivalent)
- MTS Signal Generator (B&K 2009, or equivalent)
- Sweep/Marker Generator (or Standard Signal Generator)
- DC Power Supply (5.0V/0.25A) for TAG001

Entering the Service mode

1. Enter the service mode (S-Mode) by pressing the VOLUME DOWN key on the instrument until the volume decreases to minimum.
2. Press the INFO key on the remote handset while holding the VOLUME DOWN key on the instrument.
3. Press the PROGRAM UP/DOWN buttons to select the different adjustments under the first menu and press the VOLUME UP/DOWN buttons to adjust the setting (value).
5. Press the OK button to toggle into the Main Menu selection mode and select the different Main menu sections using the PROGRAM UP/DOWN buttons. Press the OK button again to toggle back into the value adjustment mode.
6. Menus up to menu 19 can be selected directly using the remote control by pressing digital buttons 1~9, 0, notebook, CAP, Display, Sleep, Calendar, System/INS, Favourite, Return and Picture.
7. Press the Sound button to save the new settings and exit the service mode.

Note: Many factory alignments appear in the menus but only the ones listed here can be changed. The values can be accessed and the value (hex number) on the screen can be changed but the actual value the instrument is using cannot be changed except at the factory using special equipment.
The following is a list of all the menus and a description of the individual adjustments under each Main menu that can be changed. *Only the following menu items can actually be adjusted.*

Menu 1 (Remote key: 1)

Item	*Remark*
RC	R cut-off setting
GC	G cut-off setting
BC	B cut-off setting
GD	G drive setting
BD	B drive setting

Menu 2 (Remote key: 2)

Item	Remark
HIGH6	60Hz height
VP60	Vertical position
VLIN6	60Hz Vertical linearity
VSC6	Vertical S correction (60Hz)

Menu 3 (Remote key: 3)

Item	*Remark*
HPOS6	Horizontal position (60Hz)
PARA6	Parabola
TRAP6	Trapazoid
HSIZE	Horizontal size
CNRT6	Corners top
CNRB6	Corners bottom

Menu 4 (Remote key: 4)
No adjustments allowed

Menu 5(Remote key: 5)
No adjustments allowed

Menu 6(Remote key: 6)
No adjustments allowed

Menu 7(Remote key: 7)
No adjustments allowed

Menu 8 (Remote key: 8)

Item	*Remark*
RFAGC	RFAGC [12H, bit 5 ~ 0]

Menu 9 - 24
No adjustments allowed

ALIGNMENTS (Continued)

B+ Adjustment

1. Tune the instrument to receive a crosshatch signal.
2. Set the Preset Picture Mode to normal.
3. Adjust VR802 for 130Vdc +/- 0.5V at C422+ (B+).

RF AGC Adjustment

The RF AGC has been preset at the time of manufacture for optimum operation over a wide range of RF signal input conditions. Readjustment should not be required unless the tuner has been repaired or unusual signal conditions exist such as:

a. Cable TV—adjacent channel interference.
b. Picture bending and/or channel 6 color beats which are usually due to excessive RF signal input. This occurs when the receiver location is too close to the transmitting tower. It may also occur when the receiver is connected to an antenna distribution system where the RF signal has been amplified. The signal should be attenuated at the antenna input to a more satisfactory level.
c. Picture Noise caused by "broadcast noise" or weak signal. If the broadcast is "clean" and the received signal is at least 1 mV, the picture will be noise free in any area.

NOTE: Adjustment of the RF AGC parameters may not have any visible effect except under unusual conditions. Adjusting the RF AGC to one extreme of it's parameter limits will usually provide a relatively poor signal-to-noise ratio, while adjustment to the other extreme of it's parameter limits will cause a degradation of overload conditions such as channel 6 color beats or Cable TV adjacent channel interference. Use the weakest local signal to adjust RF AGC parameter setting (Menu 8). If the RF AGC parameter setting is adjusted, check all local channels for proper operation.

Screen Adjustment

Test Point:	Observe Display	
Adjust:	Screen Control	Flyback

1. Tune the instrument to receive a crosshatch signal.
2. Set the Picture color temperature to Normal and set all of the picture controls (brightness, contrast etc.) to midrange.
3. Enter the Service mode and preset the Menu 1 values to RC/GC/BC to 80 AND GD/BD to 40.
4. While still in the service mode, press the Input button on the remote control. This will collapse the vertical.
5. Adjust the screen control to just produce a dim horizontal line on the CRT.

Focus Adjustment

Test Point:	Observe Display	
Adjust:	Focus Control	Flyback

1. Tune the instrument to receive a crosshatch signal.
2. Adjust the *Focus* control for best overall focus.

Color Temperature Adjustment

Test Point:	Observe Display	
Adjust:	Menu 1 RC	(Red Cutoff)
	Menu 1 GC	(Green Cutoff)
	Menu 1 BC	(Blue Cutoff)
	Menu 1 GD	(Green Drive)
	Menu 1 BD	(Blue Drive)

1. Perform the Screen adjustment.
2. Set the Picture color temperature to Normal and set all of the picture controls (brightness, contrast etc.) to midrange.
3. Tune the instrument to receive a grayscale stairstep test pattern.
4. Enter the Service mode and adjust the values for the Cut-off and Drive controls to obtain proper color tracking (no tinting - only black, white and shades of gray). Correct color temperature is 9300 degrees - X=284 Y=299.
5. Check the low light to high light gray scale tracking (black and white picture). Should any color other than gray or white be dominant in low light to high light areas the color temperature settings have not been properly set. Repeat the procedure if necessary.

NOTE: Color Cutoff adjustments affect the low light (dark) areas while color drive adjustments affect the high light (white) areas.

ALIGNMENTS (Continued)

Sub-brightness Adjustment

Test Point:	Observe Display	
Adjust:	Menu 5 BRTC	Sub-brightness

1. Tune the instrument to receive a grayscale stairstep signal from the A/V inputs.
2. Set the Picture color temperature to Normal and set all of the picture controls (brightness, contrast etc.) to midrange.
3. Enter the Service mode and select Menu 5.
4. Adjust the value of BRTC (Sub-brightness) to just light the second dark bar making sure the first bar stays black.

Test Point:	Observe Display	
Adjust:	Menu 3 HPOS6	H Position
	Menu 3 PARA6	H Parabola
	Menu 3 TRAP6	H Trapazoid
	Menu 3 HSIZE6	H Size
	Menu 3 CNRT6	H Corner top
	Menu 3 CNRB6	H Corner bot
	Menu 2 HIGH6	Height
	Menu 2 VLIN6	Linearity
	Menu 2 VP60	Vertical Center
	Menu 2 VSC6	Vert S Correct

Note: Confirm correct convergence and purity before adjusting geometry.

1. Tune the instrument to receive a circular test pattern suitable for making visual geometry adjustments.
2. Enter the Service mode.
3. Adjust the Menu 2 and Menu 3 values listed for the least amount of geometric distortion and approximately 7% overscan.

X-Ray Protection Test

1. Tune the instrument to receive a crosshatch signal.
2. Apply an external power supply to C249 (observe polarity). Slowly increase the voltage from the supply.
3. The instrument must shut down and remain off when the voltage reaches 30 volts DC.

High Voltage Test

1. High voltage must not exceed 31.8 kV at any beam current.

CIRCUIT DESCRIPTION

Circuit Description

Tuner

The function of the tuner is to select the channel to be received and suppress the interference, amplify the high frequency signal, improve the receiving sensitivity and SNR, and to generate PIF signal through frequency conversion.

IF Channel

The IF Channel mainly ensures the sensitivity and selectivity of the complete instrument. The IF AMP integrated in TMPA8802 is made up of the third-stage dual-differential amplifier with gain value above 70db, SNR of 55dB and bandwidth of 6MHZ. The video demodulation circuit is made from the built-in PLL Sync Detector. The spectrum of the demodulation carrier is unitary and not affected by the content of the video signal.

The PLL built-in the TMPA8802 generates 45.75MHz demodulation reference signal for sync detector to demodulate the video signal, which is called 'PLL sync demodulation'.

Chroma Signal Decoding Circuit

The external BPF (band-pass filter) singles out the chroma signal and burst signal within the range of fsc+1.3MHZ from among the composite signals output from the video detector. After being amplified by ACC, the chroma signal is fed into the synchronous detector to be demodulated to obtain the color difference signal.

Luminance Channel and Matrix Circuit

The luminance channel of TMPA8802 has a black stretch circuit to make dark picture content darker thus improving the contrast and depth perception of the picture. It also has the delayed definition-enhanced circuit to enable the details of the picture seem more vivid. The luminance signal (Y) is sent into the matrix circuit after being delayed for 0.6 s and composes R/G/B signal combined with the three color-difference signals (B-Y, R-Y, G-Y).

Sync Separation and Deflection Processing Circuit

TMPA8802 has the 32fh PLL (fh = horizontal frequency). In reference to the frequency and phase information carried by the composite sync signal, the PLL generates a scan clock signal with 32fh and a horizontal drive pulse that will be obtained through 32fh countdown. An integrating circuit is used to extract vertical sync from the composite sync pulse to control the counter for vertical countdown. The circuit countdowns the 32fh clock signal, thus vertical frequency sync pulses under various systems can be obtained.

TMPA8802 includes the vertical SW former (sawtooth wave former) and can control the gain and linearity of the SW (sawtooth wave).

Sound Channel

The second SIF goes via a filter of 4.5MHz, to MSP3425. The MSP3425 then decodes the SIF into MONO, STEREO or SAP. MONO, STEREO, SAP and sound effect processing modes are adjusted via the IIC bus.

Remote Control System

The MCU (TMPA8802) of an 8-bit CPU and the software constitute the control core of the remote control system, mainly accomplishing the following functions: decoding remote control commands; auto search memory; displaying characters and patterns; switching the signal source between AV and TV. The transmitter translates the commands from the buttons and separately demodulates the 37.9KHZ carrier and 940nm infrared ray to generate the infrared transmitting signal at the LED. The remote control system has three operating modes: user-controlled mode (U-mode), service mode (S-mode) and factory default mode (D-mode). U-mode includes the following functions: channel search and memory; channel selecting; volume control, brightness adjustment, contrast and color adjustment. S-mode and D-mode are mainly used in production, checking & repairing, including the following functions: horizontal & vertical centering control, vertical amplitude and linearity adjustment; setting the adjusting range for volume, contrast, brightness, tint and color; geometric adjustment and white balance adjustment.

CRT Drive Circuit

A cascode amplifier is used to amplify the voltage and current of the R/G/B signal so the CRT drive circuit can demodulate the cathode beam current of the CRT. The R/G/ B signal input into the cascode circuit is of negative polarity.

Symbol	Stock	Description	Circuit	Model	TypeCode	Drawing
ADAPTER	268478	KNOB ADAPTER	INSTRUMENT	24V511T		60126840
BEAD	268283	FERR. BEAD HF70 4.5X5.0	ELECTRICAL COMPONENTS	27V512T		35-237250-00X
BEAD	268283	FERR. BEAD HF70 4.5X5.0	ELECTRICAL COMPONENTS	24V511T		35-237250-00X
BEAD	267016	FERR. BEAD BF60	ELECTRICAL COMPONENTS	24V511T		35-139730-00X
BEAD	268283	FERR. BEAD HF70 4.5X5.0	ELECTRICAL COMPONENTS	27V513T		35-237250-00X
BEAD	268283	FERR. BEAD HF70 4.5X5.0	ELECTRICAL COMPONENTS	24F512T		35-237250-00X
BEAD	267016	FERR. BEAD BF60	ELECTRICAL COMPONENTS	24F512T		35-139730-00X
BEAD	267016	FERR. BEAD BF60	ELECTRICAL COMPONENTS	27V513T		35-139730-00X
BEAD	267016	FERR. BEAD BF60	ELECTRICAL COMPONENTS	27V512T		35-139730-00X
BEAD	268283	FERR. BEAD HF70 4.5X5.0	ELECTRICAL COMPONENTS	27F520T		35-237250-00X
BEAD	267016	FERR. BEAD BF60	ELECTRICAL COMPONENTS	27F630T		35-139730-00X
BEAD	268283	FERR. BEAD HF70 4.5X5.0	ELECTRICAL COMPONENTS	27V520T		35-237250-00X
BEAD	267016	FERR. BEAD BF60	ELECTRICAL COMPONENTS	27V520T		35-139730-00X
BEAD	268283	FERR. BEAD HF70 4.5X5.0	ELECTRICAL COMPONENTS	27F630T		35-237250-00X
BEAD	267016	FERR. BEAD BF60	ELECTRICAL COMPONENTS	27F520T		35-139730-00X
BLOCK	268479	POWER LINE BLOC	INSTRUMENT	24V511T		35798260
BLOCK	267118	BLOCK	ELECTRICAL COMPONENTS	24F512T		62-389630-0UD
BRACK	267056	BRACKET	ELECTRICAL COMPONENTS	27F630T		62-227680-0UA
BRACK	267066	BRACKET	ELECTRICAL COMPONENTS	27V520T		67-257870-2T0
BRACK	267066	BRACKET	ELECTRICAL COMPONENTS	27F520T		67-257870-2T0
BRACK	267056	BRACKET	ELECTRICAL COMPONENTS	27V520T		62-227680-0UA
BRACK	267056	BRACKET	ELECTRICAL COMPONENTS	27F520T		62-227680-0UA
BRACK	267066	BRACKET	ELECTRICAL COMPONENTS	27F630T		67-257870-2T0
BRACKET	268452	MAIN BD BRACKET	INSTRUMENT	27V520T		16449160
BRACKET	268452	MAIN BD BRACKET	INSTRUMENT	27F520T		16449160
BRACKET	268452	MAIN BD BRACKET	INSTRUMENT	27F630T		16449160
BRACKET	267056	BRACKET	ELECTRICAL COMPONENTS	27V513T		62-227680-0UA
BRACKET	268397	FBT BRACKET	ELECTRICAL COMPONENTS	27V513T		62-227680-1UA
BRACKET	268400	IR BRACKET	ELECTRICAL COMPONENTS	27V513T		62-411370-0UN
BRACKET	268401	LED BRACKET	ELECTRICAL COMPONENTS	27V513T		62-411380-0UN
BRACKET	268464	CRT BRACKET	INSTRUMENT	24F512T		67-346610-0E0
BRACKET	268452	MAIN BD BRACKET	INSTRUMENT	27V513T		16449160
BRACKET	268402	CRT BRACKET	ELECTRICAL COMPONENTS	27V512T		67-M40068-1E4
BRACKET	268452	MAIN BD BRACKET	INSTRUMENT	27V512T		16449160
BRACKET	268433	MAIN BD BRACKET	INSTRUMENT	24V511T		62-B159MB-3UN
BRACKET	268401	LED BRACKET	ELECTRICAL COMPONENTS	27V512T		62-411380-0UN
BRACKET	267056	BRACKET	ELECTRICAL COMPONENTS	27V512T		62-227680-0UA
BRACKET	268397	FBT BRACKET	ELECTRICAL COMPONENTS	27V512T		62-227680-1UA
BRACKET	268400	IR BRACKET	ELECTRICAL COMPONENTS	27V512T		62-411370-0UN
BRACKET	268402	CRT BRACKET	ELECTRICAL COMPONENTS	27V513T		67-M40068-1E4
BUTTON	268480	PUSH BUTTON	INSTRUMENT	24V511T		56-C228FB-0HA1A
BUTTON	257999	BUTTON CLUSTER	INSTRUMENT	27V520T		1596643B
BUTTON	267119	FUNCTION BUTTON	INSTRUMENT	24F512T		56-21V1FB-0HA1B
C008	266985	CAP. CER 100PF 50V +/-5% CH	ELECTRICAL COMPONENTS	24F512T		26-EBP101-JCX
C008	266985	CAP. CER 100PF 50V +/-5% CH	ELECTRICAL COMPONENTS	27V520T		26-EBP101-JCX
C008	266985	CAP. CER 100PF 50V +/-5% CH	ELECTRICAL COMPONENTS	27V512T		26-EBP101-JCX
C008	266985	CAP. CER 100PF 50V +/-5% CH	ELECTRICAL COMPONENTS	27F630T		26-EBP101-JCX
C008	266985	CAP. CER 100PF 50V +/-5% CH	ELECTRICAL COMPONENTS	24V511T		26-EBP101-JCX
C008	266985	CAP. CER 100PF 50V +/-5% CH	ELECTRICAL COMPONENTS	27V513T		26-EBP101-JCX
C008	266985	CAP. CER 100PF 50V +/-5% CH	ELECTRICAL COMPONENTS	27F520T		26-EBP101-JCX
C01	268300	CAP. ELEC 100 UF 25V +/-20%	ELECTRICAL COMPONENTS	24F512T		25-BDB101-M1X
C01	268300	CAP. ELEC 100 UF 25V +/-20%	ELECTRICAL COMPONENTS	27F630T		25-BDB101-M1X
C01	268300	CAP. ELEC 100 UF 25V +/-20%	ELECTRICAL COMPONENTS	27V520T		25-BDB101-M1X
C01	268300	CAP. ELEC 100 UF 25V +/-20%	ELECTRICAL COMPONENTS	27V512T		25-BDB101-M1X
C01	268300	CAP. ELEC 100 UF 25V +/-20%	ELECTRICAL COMPONENTS	27V513T		25-BDB101-M1X
C01	268300	CAP. ELEC 100 UF 25V +/-20%	ELECTRICAL COMPONENTS	24V511T		25-BDB101-M1X
C01	268300	CAP. ELEC 100 UF 25V +/-20%	ELECTRICAL COMPONENTS	27F520T		25-BDB101-M1X
C021	266581	CAP. ELEC 10 UF 16V +/-20%	ELECTRICAL COMPONENTS	27F630T		25-BCB100-M1X
C021	266581	CAP. ELEC 10 UF 16V +/-20%	ELECTRICAL COMPONENTS	27V513T		25-BCB100-M1X
C021	266581	CAP. ELEC 10 UF 16V +/-20%	ELECTRICAL COMPONENTS	24V511T		25-BCB100-M1X

Symbol	Stock	Description	Circuit	Model	TypeCode	Drawing
C021	266581	CAP. ELEC 10 UF 16V +/-20%	ELECTRICAL COMPONENTS	27F520T		25-BCB100-M1X
C021	266581	CAP. ELEC 10 UF 16V +/-20%	ELECTRICAL COMPONENTS	27V520T		25-BCB100-M1X
C021	266581	CAP. ELEC 10 UF 16V +/-20%	ELECTRICAL COMPONENTS	24F512T		25-BCB100-M1X
C021	266581	CAP. ELEC 10 UF 16V +/-20%	ELECTRICAL COMPONENTS	27V512T		25-BCB100-M1X
C022	266583	CAP. CER 0.01UF 50V +80/-20% F	ELECTRICAL COMPONENTS	27V513T		26-EBP103-ZFX
C022	266583	CAP. CER 0.01UF 50V +80/-20% F	ELECTRICAL COMPONENTS	27F630T		26-EBP103-ZFX
C022	266583	CAP. CER 0.01UF 50V +80/-20% F	ELECTRICAL COMPONENTS	24F512T		26-EBP103-ZFX
C022	266583	CAP. CER 0.01UF 50V +80/-20% F	ELECTRICAL COMPONENTS	27F520T		26-EBP103-ZFX
C022	266583	CAP. CER 0.01UF 50V +80/-20% F	ELECTRICAL COMPONENTS	27V520T		26-EBP103-ZFX
C022	266583	CAP. CER 0.01UF 50V +80/-20% F	ELECTRICAL COMPONENTS	27V512T		26-EBP103-ZFX
C022	266583	CAP. CER 0.01UF 50V +80/-20% F	ELECTRICAL COMPONENTS	24V511T		26-EBP103-ZFX
C025	266581	CAP. ELEC 10 UF 16V +/-20%	ELECTRICAL COMPONENTS	24F512T		25-BCB100-M1X
C025	266581	CAP. ELEC 10 UF 16V +/-20%	ELECTRICAL COMPONENTS	27F630T		25-BCB100-M1X
C025	266581	CAP. ELEC 10 UF 16V +/-20%	ELECTRICAL COMPONENTS	27F520T		25-BCB100-M1X
C025	266581	CAP. ELEC 10 UF 16V +/-20%	ELECTRICAL COMPONENTS	27V512T		25-BCB100-M1X
C025	266581	CAP. ELEC 10 UF 16V +/-20%	ELECTRICAL COMPONENTS	27V520T		25-BCB100-M1X
C025	266581	CAP. ELEC 10 UF 16V +/-20%	ELECTRICAL COMPONENTS	24V511T		25-BCB100-M1X
C025	266581	CAP. ELEC 10 UF 16V +/-20%	ELECTRICAL COMPONENTS	27V513T		25-BCB100-M1X
C026	266583	CAP. CER 0.01UF 50V +80/-20% F	ELECTRICAL COMPONENTS	27V520T		26-EBP103-ZFX
C026	266583	CAP. CER 0.01UF 50V +80/-20% F	ELECTRICAL COMPONENTS	27F630T		26-EBP103-ZFX
C026	266583	CAP. CER 0.01UF 50V +80/-20% F	ELECTRICAL COMPONENTS	27F520T		26-EBP103-ZFX
C026	266583	CAP. CER 0.01UF 50V +80/-20% F	ELECTRICAL COMPONENTS	24V511T		26-EBP103-ZFX
C026	266583	CAP. CER 0.01UF 50V +80/-20% F	ELECTRICAL COMPONENTS	24F512T		26-EBP103-ZFX
C026	266583	CAP. CER 0.01UF 50V +80/-20% F	ELECTRICAL COMPONENTS	27V513T		26-EBP103-ZFX
C026	266583	CAP. CER 0.01UF 50V +80/-20% F	ELECTRICAL COMPONENTS	27V512T		26-EBP103-ZFX
C027	266583	CAP. CER 0.01UF 50V +80/-20% F	ELECTRICAL COMPONENTS	27V520T		26-EBP103-ZFX
C027	266583	CAP. CER 0.01UF 50V +80/-20% F	ELECTRICAL COMPONENTS	27V512T		26-EBP103-ZFX
C027	266583	CAP. CER 0.01UF 50V +80/-20% F	ELECTRICAL COMPONENTS	24F512T		26-EBP103-ZFX
C027	266583	CAP. CER 0.01UF 50V +80/-20% F	ELECTRICAL COMPONENTS	27V513T		26-EBP103-ZFX
C027	266583	CAP. CER 0.01UF 50V +80/-20% F	ELECTRICAL COMPONENTS	24V511T		26-EBP103-ZFX
C027	266583	CAP. CER 0.01UF 50V +80/-20% F	ELECTRICAL COMPONENTS	27F520T		26-EBP103-ZFX
C027	266583	CAP. CER 0.01UF 50V +80/-20% F	ELECTRICAL COMPONENTS	27F630T		26-EBP103-ZFX
C028	266581	CAP. ELEC 10 UF 16V +/-20%	ELECTRICAL COMPONENTS	27V512T		25-BCB100-M1X
C028	266581	CAP. ELEC 10 UF 16V +/-20%	ELECTRICAL COMPONENTS	24F512T		25-BCB100-M1X
C028	266581	CAP. ELEC 10 UF 16V +/-20%	ELECTRICAL COMPONENTS	27V513T		25-BCB100-M1X
C028	266581	CAP. ELEC 10 UF 16V +/-20%	ELECTRICAL COMPONENTS	24V511T		25-BCB100-M1X
C028	266581	CAP. ELEC 10 UF 16V +/-20%	ELECTRICAL COMPONENTS	27F520T		25-BCB100-M1X
C028	266581	CAP. ELEC 10 UF 16V +/-20%	ELECTRICAL COMPONENTS	27F630T		25-BCB100-M1X
C028	266581	CAP. ELEC 10 UF 16V +/-20%	ELECTRICAL COMPONENTS	27V520T		25-BCB100-M1X
C029	266583	CAP. CER 0.01UF 50V +80/-20% F	ELECTRICAL COMPONENTS	27V520T		26-EBP103-ZFX
C029	266583	CAP. CER 0.01UF 50V +80/-20% F	ELECTRICAL COMPONENTS	24V511T		26-EBP103-ZFX
C029	266583	CAP. CER 0.01UF 50V +80/-20% F	ELECTRICAL COMPONENTS	27V512T		26-EBP103-ZFX
C029	266583	CAP. CER 0.01UF 50V +80/-20% F	ELECTRICAL COMPONENTS	24F512T		26-EBP103-ZFX
C029	266583	CAP. CER 0.01UF 50V +80/-20% F	ELECTRICAL COMPONENTS	27F520T		26-EBP103-ZFX
C029	266583	CAP. CER 0.01UF 50V +80/-20% F	ELECTRICAL COMPONENTS	27F630T		26-EBP103-ZFX
C029	266583	CAP. CER 0.01UF 50V +80/-20% F	ELECTRICAL COMPONENTS	27V513T		26-EBP103-ZFX
C030	266987	CAP. CER 220PF 50V +/-5% CH	ELECTRICAL COMPONENTS	27V513T		26-EBP221-JCX
C030	266987	CAP. CER 220PF 50V +/-5% CH	ELECTRICAL COMPONENTS	27V512T		26-EBP221-JCX
C030	266987	CAP. CER 220PF 50V +/-5% CH	ELECTRICAL COMPONENTS	27V520T		26-EBP221-JCX
C030	266987	CAP. CER 220PF 50V +/-5% CH	ELECTRICAL COMPONENTS	24V511T		26-EBP221-JCX
C030	266987	CAP. CER 220PF 50V +/-5% CH	ELECTRICAL COMPONENTS	24F512T		26-EBP221-JCX
C030	266987	CAP. CER 220PF 50V +/-5% CH	ELECTRICAL COMPONENTS	27F630T		26-EBP221-JCX
C030	266987	CAP. CER 220PF 50V +/-5% CH	ELECTRICAL COMPONENTS	27F520T		26-EBP221-JCX
C031	266590	CAP. CER 39PF 50V +/-5% CH	ELECTRICAL COMPONENTS	24F512T		26-EBP390-JCX
C031	266590	CAP. CER 39PF 50V +/-5% CH	ELECTRICAL COMPONENTS	27V520T		26-EBP390-JCX
C031	266590	CAP. CER 39PF 50V +/-5% CH	ELECTRICAL COMPONENTS	27V512T		26-EBP390-JCX
C031	266590	CAP. CER 39PF 50V +/-5% CH	ELECTRICAL COMPONENTS	27F520T		26-EBP390-JCX
C031	266590	CAP. CER 39PF 50V +/-5% CH	ELECTRICAL COMPONENTS	24V511T		26-EBP390-JCX
C031	266590	CAP. CER 39PF 50V +/-5% CH	ELECTRICAL COMPONENTS	27F630T		26-EBP390-JCX
C031	266590	CAP. CER 39PF 50V +/-5% CH	ELECTRICAL COMPONENTS	27V513T		26-EBP390-JCX

Symbol	Stock	Description	Circuit	Model	TypeCode	Drawing
C032	266590	CAP. CER 39PF 50V +/-5% CH	ELECTRICAL COMPONENTS	27V512T		26-EBP390-JCX
C032	266590	CAP. CER 39PF 50V +/-5% CH	ELECTRICAL COMPONENTS	27F520T		26-EBP390-JCX
C032	266590	CAP. CER 39PF 50V +/-5% CH	ELECTRICAL COMPONENTS	27V520T		26-EBP390-JCX
C032	266590	CAP. CER 39PF 50V +/-5% CH	ELECTRICAL COMPONENTS	24F512T		26-EBP390-JCX
C032	266590	CAP. CER 39PF 50V +/-5% CH	ELECTRICAL COMPONENTS	24V511T		26-EBP390-JCX
C032	266590	CAP. CER 39PF 50V +/-5% CH	ELECTRICAL COMPONENTS	27V513T		26-EBP390-JCX
C032	266590	CAP. CER 39PF 50V +/-5% CH	ELECTRICAL COMPONENTS	27F630T		26-EBP390-JCX
C033	266581	CAP. ELEC 10 UF 16V +/-20%	ELECTRICAL COMPONENTS	27V520T		25-BCB100-M1X
C033	266581	CAP. ELEC 10 UF 16V +/-20%	ELECTRICAL COMPONENTS	27F520T		25-BCB100-M1X
C033	266581	CAP. ELEC 10 UF 16V +/-20%	ELECTRICAL COMPONENTS	27F630T		25-BCB100-M1X
C033	266581	CAP. ELEC 10 UF 16V +/-20%	ELECTRICAL COMPONENTS	27V512T		25-BCB100-M1X
C033	266581	CAP. ELEC 10 UF 16V +/-20%	ELECTRICAL COMPONENTS	24F512T		25-BCB100-M1X
C033	266581	CAP. ELEC 10 UF 16V +/-20%	ELECTRICAL COMPONENTS	27V513T		25-BCB100-M1X
C033	266581	CAP. ELEC 10 UF 16V +/-20%	ELECTRICAL COMPONENTS	24V511T		25-BCB100-M1X
C034	266583	CAP. CER 0.01UF 50V +80/-20% F	ELECTRICAL COMPONENTS	24F512T		26-EBP103-ZFX
C034	266583	CAP. CER 0.01UF 50V +80/-20% F	ELECTRICAL COMPONENTS	27V512T		26-EBP103-ZFX
C034	266583	CAP. CER 0.01UF 50V +80/-20% F	ELECTRICAL COMPONENTS	27V520T		26-EBP103-ZFX
C034	266583	CAP. CER 0.01UF 50V +80/-20% F	ELECTRICAL COMPONENTS	27V513T		26-EBP103-ZFX
C034	266583	CAP. CER 0.01UF 50V +80/-20% F	ELECTRICAL COMPONENTS	27F520T		26-EBP103-ZFX
C034	266583	CAP. CER 0.01UF 50V +80/-20% F	ELECTRICAL COMPONENTS	27F630T		26-EBP103-ZFX
C034	266583	CAP. CER 0.01UF 50V +80/-20% F	ELECTRICAL COMPONENTS	24V511T		26-EBP103-ZFX
C041	266581	CAP. ELEC 10 UF 16V +/-20%	ELECTRICAL COMPONENTS	27V520T		25-BCB100-M1X
C041	266581	CAP. ELEC 10 UF 16V +/-20%	ELECTRICAL COMPONENTS	24F512T		25-BCB100-M1X
C041	266581	CAP. ELEC 10 UF 16V +/-20%	ELECTRICAL COMPONENTS	27V513T		25-BCB100-M1X
C041	266581	CAP. ELEC 10 UF 16V +/-20%	ELECTRICAL COMPONENTS	27V512T		25-BCB100-M1X
C041	266581	CAP. ELEC 10 UF 16V +/-20%	ELECTRICAL COMPONENTS	27F630T		25-BCB100-M1X
C041	266581	CAP. ELEC 10 UF 16V +/-20%	ELECTRICAL COMPONENTS	24V511T		25-BCB100-M1X
C041	266581	CAP. ELEC 10 UF 16V +/-20%	ELECTRICAL COMPONENTS	27F520T		25-BCB100-M1X
C043	266583	CAP. CER 0.01UF 50V +80/-20% F	ELECTRICAL COMPONENTS	27V520T		26-EBP103-ZFX
C043	266583	CAP. CER 0.01UF 50V +80/-20% F	ELECTRICAL COMPONENTS	27V513T		26-EBP103-ZFX
C043	266583	CAP. CER 0.01UF 50V +80/-20% F	ELECTRICAL COMPONENTS	27F520T		26-EBP103-ZFX
C043	266583	CAP. CER 0.01UF 50V +80/-20% F	ELECTRICAL COMPONENTS	24F512T		26-EBP103-ZFX
C043	266583	CAP. CER 0.01UF 50V +80/-20% F	ELECTRICAL COMPONENTS	27V512T		26-EBP103-ZFX
C043	266583	CAP. CER 0.01UF 50V +80/-20% F	ELECTRICAL COMPONENTS	27F630T		26-EBP103-ZFX
C043	266583	CAP. CER 0.01UF 50V +80/-20% F	ELECTRICAL COMPONENTS	24V511T		26-EBP103-ZFX
C070A	266947	CAP. ELEC 47 UF 16V +/-20%	ELECTRICAL COMPONENTS	24V511T		25-BCB470-M1X
C070A	266947	CAP. ELEC 47 UF 16V +/-20%	ELECTRICAL COMPONENTS	27V512T		25-BCB470-M1X
C070A	266947	CAP. ELEC 47 UF 16V +/-20%	ELECTRICAL COMPONENTS	27V513T		25-BCB470-M1X
C070A	266947	CAP. ELEC 47 UF 16V +/-20%	ELECTRICAL COMPONENTS	27F520T		25-BCB470-M1X
C070A	266947	CAP. ELEC 47 UF 16V +/-20%	ELECTRICAL COMPONENTS	27V520T		25-BCB470-M1X
C070A	266947	CAP. ELEC 47 UF 16V +/-20%	ELECTRICAL COMPONENTS	24F512T		25-BCB470-M1X
C070A	266947	CAP. ELEC 47 UF 16V +/-20%	ELECTRICAL COMPONENTS	27F630T		25-BCB470-M1X
C1001	266971	CAP. CER 3.3 PF 50V +/-0.25 SL	ELECTRICAL COMPONENTS	27V520T		26-ABC339-CZX
C1001	266971	CAP. CER 3.3 PF 50V +/-0.25 SL	ELECTRICAL COMPONENTS	27F630T		26-ABC339-CZX
C1001	266971	CAP. CER 3.3 PF 50V +/-0.25 SL	ELECTRICAL COMPONENTS	24V511T		26-ABC339-CZX
C1001	266971	CAP. CER 3.3 PF 50V +/-0.25 SL	ELECTRICAL COMPONENTS	27F520T		26-ABC339-CZX
C1001	266971	CAP. CER 3.3 PF 50V +/-0.25 SL	ELECTRICAL COMPONENTS	24F512T		26-ABC339-CZX
C1001	266971	CAP. CER 3.3 PF 50V +/-0.25 SL	ELECTRICAL COMPONENTS	27V513T		26-ABC339-CZX
C1001	266971	CAP. CER 3.3 PF 50V +/-0.25 SL	ELECTRICAL COMPONENTS	27V512T		26-ABC339-CZX
C1002	266971	CAP. CER 3.3 PF 50V +/-0.25 SL	ELECTRICAL COMPONENTS	27F520T		26-ABC339-CZX
C1002	266971	CAP. CER 3.3 PF 50V +/-0.25 SL	ELECTRICAL COMPONENTS	24V511T		26-ABC339-CZX
C1002	266971	CAP. CER 3.3 PF 50V +/-0.25 SL	ELECTRICAL COMPONENTS	27V513T		26-ABC339-CZX
C1002	266971	CAP. CER 3.3 PF 50V +/-0.25 SL	ELECTRICAL COMPONENTS	27F630T		26-ABC339-CZX
C1002	266971	CAP. CER 3.3 PF 50V +/-0.25 SL	ELECTRICAL COMPONENTS	27V512T		26-ABC339-CZX
C1002	266971	CAP. CER 3.3 PF 50V +/-0.25 SL	ELECTRICAL COMPONENTS	24F512T		26-ABC339-CZX
C1002	266971	CAP. CER 3.3 PF 50V +/-0.25 SL	ELECTRICAL COMPONENTS	27V520T		26-ABC339-CZX
C1004	266991	CAP. CER 56PF 50V +/-5% SL TUB	ELECTRICAL COMPONENTS	27F520T		26-EBP560-JZX
C1004	266991	CAP. CER 56PF 50V +/-5% SL TUB	ELECTRICAL COMPONENTS	27F630T		26-EBP560-JZX
C1004	266991	CAP. CER 56PF 50V +/-5% SL TUB	ELECTRICAL COMPONENTS	24F512T		26-EBP560-JZX
C1004	266991	CAP. CER 56PF 50V +/-5% SL TUB	ELECTRICAL COMPONENTS	27V513T		26-EBP560-JZX

Symbol	Stock	Description	Circuit	Model	TypeCode	Drawing
C1004	266991	CAP. CER 56PF 50V +/-5% SL TUB	ELECTRICAL COMPONENTS	24V511T		26-EBP560-JZX
C1004	266991	CAP. CER 56PF 50V +/-5% SL TUB	ELECTRICAL COMPONENTS	27V512T		26-EBP560-JZX
C1004	266991	CAP. CER 56PF 50V +/-5% SL TUB	ELECTRICAL COMPONENTS	27V520T		26-EBP560-JZX
C1005	266991	CAP. CER 56PF 50V +/-5% SL TUB	ELECTRICAL COMPONENTS	27V513T		26-EBP560-JZX
C1005	266991	CAP. CER 56PF 50V +/-5% SL TUB	ELECTRICAL COMPONENTS	27F630T		26-EBP560-JZX
C1005	266991	CAP. CER 56PF 50V +/-5% SL TUB	ELECTRICAL COMPONENTS	24F512T		26-EBP560-JZX
C1005	266991	CAP. CER 56PF 50V +/-5% SL TUB	ELECTRICAL COMPONENTS	27V512T		26-EBP560-JZX
C1005	266991	CAP. CER 56PF 50V +/-5% SL TUB	ELECTRICAL COMPONENTS	27V520T		26-EBP560-JZX
C1005	266991	CAP. CER 56PF 50V +/-5% SL TUB	ELECTRICAL COMPONENTS	27F520T		26-EBP560-JZX
C1005	266991	CAP. CER 56PF 50V +/-5% SL TUB	ELECTRICAL COMPONENTS	24V511T		26-EBP560-JZX
C1006	266997	CAP. M.P.E 0.1 UF 63V +/-5%	ELECTRICAL COMPONENTS	27F630T		27-MBC104-J0X
C1006	266997	CAP. M.P.E 0.1 UF 63V +/-5%	ELECTRICAL COMPONENTS	27F520T		27-MBC104-J0X
C1006	266997	CAP. M.P.E 0.1 UF 63V +/-5%	ELECTRICAL COMPONENTS	24F512T		27-MBC104-J0X
C1006	266997	CAP. M.P.E 0.1 UF 63V +/-5%	ELECTRICAL COMPONENTS	24V511T		27-MBC104-J0X
C1006	266997	CAP. M.P.E 0.1 UF 63V +/-5%	ELECTRICAL COMPONENTS	27V520T		27-MBC104-J0X
C1006	266997	CAP. M.P.E 0.1 UF 63V +/-5%	ELECTRICAL COMPONENTS	27V513T		27-MBC104-J0X
C1006	266997	CAP. M.P.E 0.1 UF 63V +/-5%	ELECTRICAL COMPONENTS	27V512T		27-MBC104-J0X
C1008	266997	CAP. M.P.E 0.1 UF 63V +/-5%	ELECTRICAL COMPONENTS	24V511T		27-MBC104-J0X
C1008	266997	CAP. M.P.E 0.1 UF 63V +/-5%	ELECTRICAL COMPONENTS	27F630T		27-MBC104-J0X
C1008	266997	CAP. M.P.E 0.1 UF 63V +/-5%	ELECTRICAL COMPONENTS	27V513T		27-MBC104-J0X
C1008	266997	CAP. M.P.E 0.1 UF 63V +/-5%	ELECTRICAL COMPONENTS	24F512T		27-MBC104-J0X
C1008	266997	CAP. M.P.E 0.1 UF 63V +/-5%	ELECTRICAL COMPONENTS	27V512T		27-MBC104-J0X
C1008	266997	CAP. M.P.E 0.1 UF 63V +/-5%	ELECTRICAL COMPONENTS	27V520T		27-MBC104-J0X
C1008	266997	CAP. M.P.E 0.1 UF 63V +/-5%	ELECTRICAL COMPONENTS	27F520T		27-MBC104-J0X
C1009	266581	CAP. ELEC 10 UF 16V +/-20%	ELECTRICAL COMPONENTS	24F512T		25-BCB100-M1X
C1009	266581	CAP. ELEC 10 UF 16V +/-20%	ELECTRICAL COMPONENTS	27F520T		25-BCB100-M1X
C1009	266581	CAP. ELEC 10 UF 16V +/-20%	ELECTRICAL COMPONENTS	27V520T		25-BCB100-M1X
C1009	266581	CAP. ELEC 10 UF 16V +/-20%	ELECTRICAL COMPONENTS	27V513T		25-BCB100-M1X
C1009	266581	CAP. ELEC 10 UF 16V +/-20%	ELECTRICAL COMPONENTS	27F630T		25-BCB100-M1X
C1009	266581	CAP. ELEC 10 UF 16V +/-20%	ELECTRICAL COMPONENTS	27V512T		25-BCB100-M1X
C1009	266581	CAP. ELEC 10 UF 16V +/-20%	ELECTRICAL COMPONENTS	24V511T		25-BCB100-M1X
C101	266959	CAP. ELEC 4.7 UF 50V +/-20%	ELECTRICAL COMPONENTS	27V513T		25-BFB479-M1X
C101	266959	CAP. ELEC 4.7 UF 50V +/-20%	ELECTRICAL COMPONENTS	24F512T		25-BFB479-M1X
C101	266959	CAP. ELEC 4.7 UF 50V +/-20%	ELECTRICAL COMPONENTS	27V520T		25-BFB479-M1X
C101	266959	CAP. ELEC 4.7 UF 50V +/-20%	ELECTRICAL COMPONENTS	24V511T		25-BFB479-M1X
C101	266959	CAP. ELEC 4.7 UF 50V +/-20%	ELECTRICAL COMPONENTS	27F630T		25-BFB479-M1X
C101	266959	CAP. ELEC 4.7 UF 50V +/-20%	ELECTRICAL COMPONENTS	27F520T		25-BFB479-M1X
C101	266959	CAP. ELEC 4.7 UF 50V +/-20%	ELECTRICAL COMPONENTS	27V512T		25-BFB479-M1X
C1010	266957	CAP. ELEC 3.3 UF 50V +/-20%	ELECTRICAL COMPONENTS	27F630T		25-BFB339-M1X
C1010	266957	CAP. ELEC 3.3 UF 50V +/-20%	ELECTRICAL COMPONENTS	27V520T		25-BFB339-M1X
C1010	266957	CAP. ELEC 3.3 UF 50V +/-20%	ELECTRICAL COMPONENTS	24F512T		25-BFB339-M1X
C1010	266957	CAP. ELEC 3.3 UF 50V +/-20%	ELECTRICAL COMPONENTS	24V511T		25-BFB339-M1X
C1010	266957	CAP. ELEC 3.3 UF 50V +/-20%	ELECTRICAL COMPONENTS	27F520T		25-BFB339-M1X
C1010	266957	CAP. ELEC 3.3 UF 50V +/-20%	ELECTRICAL COMPONENTS	27V513T		25-BFB339-M1X
C1010	266957	CAP. ELEC 3.3 UF 50V +/-20%	ELECTRICAL COMPONENTS	27V512T		25-BFB339-M1X
C1011	266997	CAP. M.P.E 0.1 UF 63V +/-5%	ELECTRICAL COMPONENTS	24F512T		27-MBC104-J0X
C1011	266997	CAP. M.P.E 0.1 UF 63V +/-5%	ELECTRICAL COMPONENTS	27V513T		27-MBC104-J0X
C1011	266997	CAP. M.P.E 0.1 UF 63V +/-5%	ELECTRICAL COMPONENTS	27V520T		27-MBC104-J0X
C1011	266997	CAP. M.P.E 0.1 UF 63V +/-5%	ELECTRICAL COMPONENTS	24V511T		27-MBC104-J0X
C1011	266997	CAP. M.P.E 0.1 UF 63V +/-5%	ELECTRICAL COMPONENTS	27V512T		27-MBC104-J0X
C1011	266997	CAP. M.P.E 0.1 UF 63V +/-5%	ELECTRICAL COMPONENTS	27F520T		27-MBC104-J0X
C1011	266997	CAP. M.P.E 0.1 UF 63V +/-5%	ELECTRICAL COMPONENTS	27F630T		27-MBC104-J0X
C1012	266986	CAP. CER 1500PF 50V +/-10% B	ELECTRICAL COMPONENTS	27V520T		26-EBP152-KBX
C1012	266986	CAP. CER 1500PF 50V +/-10% B	ELECTRICAL COMPONENTS	27F520T		26-EBP152-KBX
C1012	266986	CAP. CER 1500PF 50V +/-10% B	ELECTRICAL COMPONENTS	27V513T		26-EBP152-KBX
C1012	266986	CAP. CER 1500PF 50V +/-10% B	ELECTRICAL COMPONENTS	27F630T		26-EBP152-KBX
C1012	266986	CAP. CER 1500PF 50V +/-10% B	ELECTRICAL COMPONENTS	24V511T		26-EBP152-KBX
C1012	266986	CAP. CER 1500PF 50V +/-10% B	ELECTRICAL COMPONENTS	24F512T		26-EBP152-KBX
C1012	266986	CAP. CER 1500PF 50V +/-10% B	ELECTRICAL COMPONENTS	27V512T		26-EBP152-KBX
C1013	266581	CAP. ELEC 10 UF 16V +/-20%	ELECTRICAL COMPONENTS	27V512T		25-BCB100-M1X

Symbol	Stock	Description	Circuit	Model	TypeCode	Drawing
C1013	266581	CAP. ELEC 10 UF 16V +/-20%	ELECTRICAL COMPONENTS	27F520T		25-BCB100-M1X
C1013	266581	CAP. ELEC 10 UF 16V +/-20%	ELECTRICAL COMPONENTS	24F512T		25-BCB100-M1X
C1013	266581	CAP. ELEC 10 UF 16V +/-20%	ELECTRICAL COMPONENTS	27F630T		25-BCB100-M1X
C1013	266581	CAP. ELEC 10 UF 16V +/-20%	ELECTRICAL COMPONENTS	27V520T		25-BCB100-M1X
C1013	266581	CAP. ELEC 10 UF 16V +/-20%	ELECTRICAL COMPONENTS	27V513T		25-BCB100-M1X
C1013	266581	CAP. ELEC 10 UF 16V +/-20%	ELECTRICAL COMPONENTS	24V511T		25-BCB100-M1X
C1014	266581	CAP. ELEC 10 UF 16V +/-20%	ELECTRICAL COMPONENTS	24V511T		25-BCB100-M1X
C1014	266581	CAP. ELEC 10 UF 16V +/-20%	ELECTRICAL COMPONENTS	24F512T		25-BCB100-M1X
C1014	266581	CAP. ELEC 10 UF 16V +/-20%	ELECTRICAL COMPONENTS	27V513T		25-BCB100-M1X
C1014	266581	CAP. ELEC 10 UF 16V +/-20%	ELECTRICAL COMPONENTS	27V520T		25-BCB100-M1X
C1014	266581	CAP. ELEC 10 UF 16V +/-20%	ELECTRICAL COMPONENTS	27F520T		25-BCB100-M1X
C1014	266581	CAP. ELEC 10 UF 16V +/-20%	ELECTRICAL COMPONENTS	27F630T		25-BCB100-M1X
C1014	266581	CAP. ELEC 10 UF 16V +/-20%	ELECTRICAL COMPONENTS	27V512T		25-BCB100-M1X
C1015	266581	CAP. ELEC 10 UF 16V +/-20%	ELECTRICAL COMPONENTS	24V511T		25-BCB100-M1X
C1015	266581	CAP. ELEC 10 UF 16V +/-20%	ELECTRICAL COMPONENTS	27V513T		25-BCB100-M1X
C1015	266581	CAP. ELEC 10 UF 16V +/-20%	ELECTRICAL COMPONENTS	27V512T		25-BCB100-M1X
C1015	266581	CAP. ELEC 10 UF 16V +/-20%	ELECTRICAL COMPONENTS	24F512T		25-BCB100-M1X
C1015	266581	CAP. ELEC 10 UF 16V +/-20%	ELECTRICAL COMPONENTS	27V520T		25-BCB100-M1X
C1015	266581	CAP. ELEC 10 UF 16V +/-20%	ELECTRICAL COMPONENTS	27F630T		25-BCB100-M1X
C1015	266581	CAP. ELEC 10 UF 16V +/-20%	ELECTRICAL COMPONENTS	27F520T		25-BCB100-M1X
C1016	266581	CAP. ELEC 10 UF 16V +/-20%	ELECTRICAL COMPONENTS	27V513T		25-BCB100-M1X
C1016	266581	CAP. ELEC 10 UF 16V +/-20%	ELECTRICAL COMPONENTS	27V512T		25-BCB100-M1X
C1016	266581	CAP. ELEC 10 UF 16V +/-20%	ELECTRICAL COMPONENTS	24V511T		25-BCB100-M1X
C1016	266581	CAP. ELEC 10 UF 16V +/-20%	ELECTRICAL COMPONENTS	24F512T		25-BCB100-M1X
C1016	266581	CAP. ELEC 10 UF 16V +/-20%	ELECTRICAL COMPONENTS	27F520T		25-BCB100-M1X
C1016	266581	CAP. ELEC 10 UF 16V +/-20%	ELECTRICAL COMPONENTS	27F630T		25-BCB100-M1X
C1016	266581	CAP. ELEC 10 UF 16V +/-20%	ELECTRICAL COMPONENTS	27V520T		25-BCB100-M1X
C1017	266999	CAP. M.P.E 0.47UF 63V +/-5%	ELECTRICAL COMPONENTS	27F630T		27-MBC474-J0X
C1017	266999	CAP. M.P.E 0.47UF 63V +/-5%	ELECTRICAL COMPONENTS	27F520T		27-MBC474-J0X
C1017	266999	CAP. M.P.E 0.47UF 63V +/-5%	ELECTRICAL COMPONENTS	27V512T		27-MBC474-J0X
C1017	266999	CAP. M.P.E 0.47UF 63V +/-5%	ELECTRICAL COMPONENTS	27V513T		27-MBC474-J0X
C1017	266999	CAP. M.P.E 0.47UF 63V +/-5%	ELECTRICAL COMPONENTS	24V511T		27-MBC474-J0X
C1017	266999	CAP. M.P.E 0.47UF 63V +/-5%	ELECTRICAL COMPONENTS	27V520T		27-MBC474-J0X
C1017	266999	CAP. M.P.E 0.47UF 63V +/-5%	ELECTRICAL COMPONENTS	24F512T		27-MBC474-J0X
C1018	266997	CAP. M.P.E 0.1 UF 63V +/-5%	ELECTRICAL COMPONENTS	27V512T		27-MBC104-J0X
C1018	266997	CAP. M.P.E 0.1 UF 63V +/-5%	ELECTRICAL COMPONENTS	27V513T		27-MBC104-J0X
C1018	266997	CAP. M.P.E 0.1 UF 63V +/-5%	ELECTRICAL COMPONENTS	24F512T		27-MBC104-J0X
C1018	266997	CAP. M.P.E 0.1 UF 63V +/-5%	ELECTRICAL COMPONENTS	27F520T		27-MBC104-J0X
C1018	266997	CAP. M.P.E 0.1 UF 63V +/-5%	ELECTRICAL COMPONENTS	24V511T		27-MBC104-J0X
C1018	266997	CAP. M.P.E 0.1 UF 63V +/-5%	ELECTRICAL COMPONENTS	27V520T		27-MBC104-J0X
C1018	266997	CAP. M.P.E 0.1 UF 63V +/-5%	ELECTRICAL COMPONENTS	27F630T		27-MBC104-J0X
C1019	266947	CAP. ELEC 47 UF 16V +/-20%	ELECTRICAL COMPONENTS	27V512T		25-BCB470-M1X
C1019	266947	CAP. ELEC 47 UF 16V +/-20%	ELECTRICAL COMPONENTS	24F512T		25-BCB470-M1X
C1019	266947	CAP. ELEC 47 UF 16V +/-20%	ELECTRICAL COMPONENTS	27F520T		25-BCB470-M1X
C1019	266947	CAP. ELEC 47 UF 16V +/-20%	ELECTRICAL COMPONENTS	27F630T		25-BCB470-M1X
C1019	266947	CAP. ELEC 47 UF 16V +/-20%	ELECTRICAL COMPONENTS	27V513T		25-BCB470-M1X
C1019	266947	CAP. ELEC 47 UF 16V +/-20%	ELECTRICAL COMPONENTS	27V520T		25-BCB470-M1X
C1019	266947	CAP. ELEC 47 UF 16V +/-20%	ELECTRICAL COMPONENTS	24V511T		25-BCB470-M1X
C1023	266997	CAP. M.P.E 0.1 UF 63V +/-5%	ELECTRICAL COMPONENTS	27V513T		27-MBC104-J0X
C1023	266997	CAP. M.P.E 0.1 UF 63V +/-5%	ELECTRICAL COMPONENTS	27F520T		27-MBC104-J0X
C1023	266997	CAP. M.P.E 0.1 UF 63V +/-5%	ELECTRICAL COMPONENTS	27V512T		27-MBC104-J0X
C1023	266997	CAP. M.P.E 0.1 UF 63V +/-5%	ELECTRICAL COMPONENTS	24V511T		27-MBC104-J0X
C1023	266997	CAP. M.P.E 0.1 UF 63V +/-5%	ELECTRICAL COMPONENTS	27F630T		27-MBC104-J0X
C1023	266997	CAP. M.P.E 0.1 UF 63V +/-5%	ELECTRICAL COMPONENTS	27V520T		27-MBC104-J0X
C1023	266997	CAP. M.P.E 0.1 UF 63V +/-5%	ELECTRICAL COMPONENTS	24F512T		27-MBC104-J0X
C1024	266997	CAP. M.P.E 0.1 UF 63V +/-5%	ELECTRICAL COMPONENTS	24F512T		27-MBC104-J0X
C1024	266997	CAP. M.P.E 0.1 UF 63V +/-5%	ELECTRICAL COMPONENTS	24V511T		27-MBC104-J0X
C1024	266997	CAP. M.P.E 0.1 UF 63V +/-5%	ELECTRICAL COMPONENTS	27V520T		27-MBC104-J0X
C1024	266997	CAP. M.P.E 0.1 UF 63V +/-5%	ELECTRICAL COMPONENTS	27F520T		27-MBC104-J0X
C1024	266997	CAP. M.P.E 0.1 UF 63V +/-5%	ELECTRICAL COMPONENTS	27F630T		27-MBC104-J0X

Symbol	Stock	Description	Circuit	Model	TypeCode	Drawing
C1024	266997	CAP. M.P.E 0.1 UF 63V +/-5%	ELECTRICAL COMPONENTS	27V513T		27-MBC104-J0X
C1024	266997	CAP. M.P.E 0.1 UF 63V +/-5%	ELECTRICAL COMPONENTS	27V512T		27-MBC104-J0X
C1025	266990	CAP. CER 470PF 50V +/-5% CH	ELECTRICAL COMPONENTS	27V512T		26-EBP471-JCX
C1025	266990	CAP. CER 470PF 50V +/-5% CH	ELECTRICAL COMPONENTS	27V513T		26-EBP471-JCX
C1025	266990	CAP. CER 470PF 50V +/-5% CH	ELECTRICAL COMPONENTS	24V511T		26-EBP471-JCX
C1025	266990	CAP. CER 470PF 50V +/-5% CH	ELECTRICAL COMPONENTS	27F520T		26-EBP471-JCX
C1025	266990	CAP. CER 470PF 50V +/-5% CH	ELECTRICAL COMPONENTS	24F512T		26-EBP471-JCX
C1025	266990	CAP. CER 470PF 50V +/-5% CH	ELECTRICAL COMPONENTS	27V520T		26-EBP471-JCX
C1025	266990	CAP. CER 470PF 50V +/-5% CH	ELECTRICAL COMPONENTS	27F630T		26-EBP471-JCX
C1031	266583	CAP. CER 0.01UF 50V +80/-20% F	ELECTRICAL COMPONENTS	24V511T		26-EBP103-ZFX
C1031	266583	CAP. CER 0.01UF 50V +80/-20% F	ELECTRICAL COMPONENTS	24F512T		26-EBP103-ZFX
C1031	266583	CAP. CER 0.01UF 50V +80/-20% F	ELECTRICAL COMPONENTS	27F630T		26-EBP103-ZFX
C1031	266583	CAP. CER 0.01UF 50V +80/-20% F	ELECTRICAL COMPONENTS	27V513T		26-EBP103-ZFX
C1031	266583	CAP. CER 0.01UF 50V +80/-20% F	ELECTRICAL COMPONENTS	27V512T		26-EBP103-ZFX
C1031	266583	CAP. CER 0.01UF 50V +80/-20% F	ELECTRICAL COMPONENTS	27V520T		26-EBP103-ZFX
C1031	266583	CAP. CER 0.01UF 50V +80/-20% F	ELECTRICAL COMPONENTS	27F520T		26-EBP103-ZFX
C1033	266583	CAP. CER 0.01UF 50V +80/-20% F	ELECTRICAL COMPONENTS	24V511T		26-EBP103-ZFX
C1033	266583	CAP. CER 0.01UF 50V +80/-20% F	ELECTRICAL COMPONENTS	27V512T		26-EBP103-ZFX
C1033	266583	CAP. CER 0.01UF 50V +80/-20% F	ELECTRICAL COMPONENTS	27F520T		26-EBP103-ZFX
C1033	266583	CAP. CER 0.01UF 50V +80/-20% F	ELECTRICAL COMPONENTS	27V520T		26-EBP103-ZFX
C1033	266583	CAP. CER 0.01UF 50V +80/-20% F	ELECTRICAL COMPONENTS	27F630T		26-EBP103-ZFX
C1033	266583	CAP. CER 0.01UF 50V +80/-20% F	ELECTRICAL COMPONENTS	24F512T		26-EBP103-ZFX
C1033	266583	CAP. CER 0.01UF 50V +80/-20% F	ELECTRICAL COMPONENTS	27V513T		26-EBP103-ZFX
C1034	266583	CAP. CER 0.01UF 50V +80/-20% F	ELECTRICAL COMPONENTS	27V520T		26-EBP103-ZFX
C1034	266583	CAP. CER 0.01UF 50V +80/-20% F	ELECTRICAL COMPONENTS	27V512T		26-EBP103-ZFX
C1034	266583	CAP. CER 0.01UF 50V +80/-20% F	ELECTRICAL COMPONENTS	27F630T		26-EBP103-ZFX
C1034	266583	CAP. CER 0.01UF 50V +80/-20% F	ELECTRICAL COMPONENTS	27V513T		26-EBP103-ZFX
C1034	266583	CAP. CER 0.01UF 50V +80/-20% F	ELECTRICAL COMPONENTS	24V511T		26-EBP103-ZFX
C1034	266583	CAP. CER 0.01UF 50V +80/-20% F	ELECTRICAL COMPONENTS	27F520T		26-EBP103-ZFX
C1034	266583	CAP. CER 0.01UF 50V +80/-20% F	ELECTRICAL COMPONENTS	24F512T		26-EBP103-ZFX
C1035	268285	CAP. CER 22PF 50V +/-5% SL TU	ELECTRICAL COMPONENTS	24F512T		26-EBP220-JZX
C1035	268285	CAP. CER 22PF 50V +/-5% SL TU	ELECTRICAL COMPONENTS	27V513T		26-EBP220-JZX
C1035	268285	CAP. CER 22PF 50V +/-5% SL TU	ELECTRICAL COMPONENTS	27F630T		26-EBP220-JZX
C1035	268285	CAP. CER 22PF 50V +/-5% SL TU	ELECTRICAL COMPONENTS	27V520T		26-EBP220-JZX
C1035	268285	CAP. CER 22PF 50V +/-5% SL TU	ELECTRICAL COMPONENTS	27V512T		26-EBP220-JZX
C1035	268285	CAP. CER 22PF 50V +/-5% SL TU	ELECTRICAL COMPONENTS	27F520T		26-EBP220-JZX
C1035	268285	CAP. CER 22PF 50V +/-5% SL TU	ELECTRICAL COMPONENTS	24V511T		26-EBP220-JZX
C1036	268285	CAP. CER 22PF 50V +/-5% SL TU	ELECTRICAL COMPONENTS	27V513T		26-EBP220-JZX
C1036	268285	CAP. CER 22PF 50V +/-5% SL TU	ELECTRICAL COMPONENTS	27V520T		26-EBP220-JZX
C1036	268285	CAP. CER 22PF 50V +/-5% SL TU	ELECTRICAL COMPONENTS	27V512T		26-EBP220-JZX
C1036	268285	CAP. CER 22PF 50V +/-5% SL TU	ELECTRICAL COMPONENTS	24F512T		26-EBP220-JZX
C1036	268285	CAP. CER 22PF 50V +/-5% SL TU	ELECTRICAL COMPONENTS	27F520T		26-EBP220-JZX
C1036	268285	CAP. CER 22PF 50V +/-5% SL TU	ELECTRICAL COMPONENTS	27F630T		26-EBP220-JZX
C1036	268285	CAP. CER 22PF 50V +/-5% SL TU	ELECTRICAL COMPONENTS	24V511T		26-EBP220-JZX
C1037	266583	CAP. CER 0.01UF 50V +80/-20% F	ELECTRICAL COMPONENTS	27V520T		26-EBP103-ZFX
C1037	266583	CAP. CER 0.01UF 50V +80/-20% F	ELECTRICAL COMPONENTS	27F630T		26-EBP103-ZFX
C1037	266583	CAP. CER 0.01UF 50V +80/-20% F	ELECTRICAL COMPONENTS	24F512T		26-EBP103-ZFX
C1037	266583	CAP. CER 0.01UF 50V +80/-20% F	ELECTRICAL COMPONENTS	27V513T		26-EBP103-ZFX
C1037	266583	CAP. CER 0.01UF 50V +80/-20% F	ELECTRICAL COMPONENTS	27F520T		26-EBP103-ZFX
C1037	266583	CAP. CER 0.01UF 50V +80/-20% F	ELECTRICAL COMPONENTS	24V511T		26-EBP103-ZFX
C1037	266583	CAP. CER 0.01UF 50V +80/-20% F	ELECTRICAL COMPONENTS	27V512T		26-EBP103-ZFX
C1038	266583	CAP. CER 0.01UF 50V +80/-20% F	ELECTRICAL COMPONENTS	27F630T		26-EBP103-ZFX
C1038	266583	CAP. CER 0.01UF 50V +80/-20% F	ELECTRICAL COMPONENTS	27F520T		26-EBP103-ZFX
C1038	266583	CAP. CER 0.01UF 50V +80/-20% F	ELECTRICAL COMPONENTS	24V511T		26-EBP103-ZFX
C1038	266583	CAP. CER 0.01UF 50V +80/-20% F	ELECTRICAL COMPONENTS	27V520T		26-EBP103-ZFX
C1038	266583	CAP. CER 0.01UF 50V +80/-20% F	ELECTRICAL COMPONENTS	24F512T		26-EBP103-ZFX
C1038	266583	CAP. CER 0.01UF 50V +80/-20% F	ELECTRICAL COMPONENTS	27V512T		26-EBP103-ZFX
C1038	266583	CAP. CER 0.01UF 50V +80/-20% F	ELECTRICAL COMPONENTS	27V513T		26-EBP103-ZFX
C104	266997	CAP. M.P.E 0.1 UF 63V +/-5%	ELECTRICAL COMPONENTS	27V520T		27-MBC104-J0X
C104	266997	CAP. M.P.E 0.1 UF 63V +/-5%	ELECTRICAL COMPONENTS	27F520T		27-MBC104-J0X

Symbol	Stock	Description	Circuit	Model	TypeCode	Drawing
C104	266997	CAP. M.P.E 0.1 UF 63V +/-5%	ELECTRICAL COMPONENTS	27V513T		27-MBC104-J0X
C104	266997	CAP. M.P.E 0.1 UF 63V +/-5%	ELECTRICAL COMPONENTS	24F512T		27-MBC104-J0X
C104	266997	CAP. M.P.E 0.1 UF 63V +/-5%	ELECTRICAL COMPONENTS	27F630T		27-MBC104-J0X
C104	266997	CAP. M.P.E 0.1 UF 63V +/-5%	ELECTRICAL COMPONENTS	27V512T		27-MBC104-J0X
C104	266997	CAP. M.P.E 0.1 UF 63V +/-5%	ELECTRICAL COMPONENTS	24V511T		27-MBC104-J0X
C105	268286	CAP. ELEC 100 UF 50V +/-20%	ELECTRICAL COMPONENTS	27V513T		25-BFB101-M1X
C105	268286	CAP. ELEC 100 UF 50V +/-20%	ELECTRICAL COMPONENTS	27V520T		25-BFB101-M1X
C105	268286	CAP. ELEC 100 UF 50V +/-20%	ELECTRICAL COMPONENTS	27F630T		25-BFB101-M1X
C105	268286	CAP. ELEC 100 UF 50V +/-20%	ELECTRICAL COMPONENTS	27F520T		25-BFB101-M1X
C105	268286	CAP. ELEC 100 UF 50V +/-20%	ELECTRICAL COMPONENTS	27V512T		25-BFB101-M1X
C105	268286	CAP. ELEC 100 UF 50V +/-20%	ELECTRICAL COMPONENTS	24V511T		25-BFB101-M1X
C105	268286	CAP. ELEC 100 UF 50V +/-20%	ELECTRICAL COMPONENTS	24F512T		25-BFB101-M1X
C106	266583	CAP. CER 0.01UF 50V +80/-20% F	ELECTRICAL COMPONENTS	27F520T		26-EBP103-ZFX
C106	266583	CAP. CER 0.01UF 50V +80/-20% F	ELECTRICAL COMPONENTS	24V511T		26-EBP103-ZFX
C106	266583	CAP. CER 0.01UF 50V +80/-20% F	ELECTRICAL COMPONENTS	27V513T		26-EBP103-ZFX
C106	266583	CAP. CER 0.01UF 50V +80/-20% F	ELECTRICAL COMPONENTS	27V520T		26-EBP103-ZFX
C106	266583	CAP. CER 0.01UF 50V +80/-20% F	ELECTRICAL COMPONENTS	27V512T		26-EBP103-ZFX
C106	266583	CAP. CER 0.01UF 50V +80/-20% F	ELECTRICAL COMPONENTS	24F512T		26-EBP103-ZFX
C106	266583	CAP. CER 0.01UF 50V +80/-20% F	ELECTRICAL COMPONENTS	27F630T		26-EBP103-ZFX
C107	266583	CAP. CER 0.01UF 50V +80/-20% F	ELECTRICAL COMPONENTS	27V513T		26-EBP103-ZFX
C107	266583	CAP. CER 0.01UF 50V +80/-20% F	ELECTRICAL COMPONENTS	27V512T		26-EBP103-ZFX
C107	266583	CAP. CER 0.01UF 50V +80/-20% F	ELECTRICAL COMPONENTS	27V520T		26-EBP103-ZFX
C107	266583	CAP. CER 0.01UF 50V +80/-20% F	ELECTRICAL COMPONENTS	24V511T		26-EBP103-ZFX
C107	266583	CAP. CER 0.01UF 50V +80/-20% F	ELECTRICAL COMPONENTS	27F520T		26-EBP103-ZFX
C107	266583	CAP. CER 0.01UF 50V +80/-20% F	ELECTRICAL COMPONENTS	27F630T		26-EBP103-ZFX
C107	266583	CAP. CER 0.01UF 50V +80/-20% F	ELECTRICAL COMPONENTS	24F512T		26-EBP103-ZFX
C108	266583	CAP. CER 0.01UF 50V +80/-20% F	ELECTRICAL COMPONENTS	27F630T		26-EBP103-ZFX
C108	266583	CAP. CER 0.01UF 50V +80/-20% F	ELECTRICAL COMPONENTS	27V512T		26-EBP103-ZFX
C108	266583	CAP. CER 0.01UF 50V +80/-20% F	ELECTRICAL COMPONENTS	27F520T		26-EBP103-ZFX
C108	266583	CAP. CER 0.01UF 50V +80/-20% F	ELECTRICAL COMPONENTS	27V520T		26-EBP103-ZFX
C108	266583	CAP. CER 0.01UF 50V +80/-20% F	ELECTRICAL COMPONENTS	24F512T		26-EBP103-ZFX
C108	266583	CAP. CER 0.01UF 50V +80/-20% F	ELECTRICAL COMPONENTS	27V513T		26-EBP103-ZFX
C108	266583	CAP. CER 0.01UF 50V +80/-20% F	ELECTRICAL COMPONENTS	24V511T		26-EBP103-ZFX
C109	266582	CAP. CER 1000 PF 50V +/-10% B	ELECTRICAL COMPONENTS	24V511T		26-EBP102-KBX
C109	266582	CAP. CER 1000 PF 50V +/-10% B	ELECTRICAL COMPONENTS	27F630T		26-EBP102-KBX
C109	266582	CAP. CER 1000 PF 50V +/-10% B	ELECTRICAL COMPONENTS	27V520T		26-EBP102-KBX
C109	266582	CAP. CER 1000 PF 50V +/-10% B	ELECTRICAL COMPONENTS	27F520T		26-EBP102-KBX
C109	266582	CAP. CER 1000 PF 50V +/-10% B	ELECTRICAL COMPONENTS	27V513T		26-EBP102-KBX
C109	266582	CAP. CER 1000 PF 50V +/-10% B	ELECTRICAL COMPONENTS	27V512T		26-EBP102-KBX
C109	266582	CAP. CER 1000 PF 50V +/-10% B	ELECTRICAL COMPONENTS	24F512T		26-EBP102-KBX
C1201	268287	CAP. CER 22PF 50V +/-5% CH	ELECTRICAL COMPONENTS	27F520T		26-EBP220-JCX
C1201	268287	CAP. CER 22PF 50V +/-5% CH	ELECTRICAL COMPONENTS	27F630T		26-EBP220-JCX
C1201	268287	CAP. CER 22PF 50V +/-5% CH	ELECTRICAL COMPONENTS	27V520T		26-EBP220-JCX
C1202	268288	CAP. CER 12PF 50V +/-5% CH	ELECTRICAL COMPONENTS	27V520T		26-EBP120-JCX
C1202	268288	CAP. CER 12PF 50V +/-5% CH	ELECTRICAL COMPONENTS	27F520T		26-EBP120-JCX
C1202	268288	CAP. CER 12PF 50V +/-5% CH	ELECTRICAL COMPONENTS	27F630T		26-EBP120-JCX
C1203	268289	CAP. CER 15PF 50V +/-5% CH	ELECTRICAL COMPONENTS	27V520T		26-EBP150-JCX
C1203	268289	CAP. CER 15PF 50V +/-5% CH	ELECTRICAL COMPONENTS	27F630T		26-EBP150-JCX
C1203	268289	CAP. CER 15PF 50V +/-5% CH	ELECTRICAL COMPONENTS	27F520T		26-EBP150-JCX
C1204	266947	CAP. ELEC 47 UF 16V +/-20%	ELECTRICAL COMPONENTS	27F520T		25-BCB470-M1X
C1204	266947	CAP. ELEC 47 UF 16V +/-20%	ELECTRICAL COMPONENTS	27F630T		25-BCB470-M1X
C1204	266947	CAP. ELEC 47 UF 16V +/-20%	ELECTRICAL COMPONENTS	27V520T		25-BCB470-M1X
C1205	268290	CAP. CER 0.1UF 50V +80%/-20%	ELECTRICAL COMPONENTS	27F520T		26-EBP104-ZFX
C1205	268290	CAP. CER 0.1UF 50V +80%/-20%	ELECTRICAL COMPONENTS	27V520T		26-EBP104-ZFX
C1205	268290	CAP. CER 0.1UF 50V +80%/-20%	ELECTRICAL COMPONENTS	27F630T		26-EBP104-ZFX
C1206	266947	CAP. ELEC 47 UF 16V +/-20%	ELECTRICAL COMPONENTS	27V520T		25-BCB470-M1X
C1206	266947	CAP. ELEC 47 UF 16V +/-20%	ELECTRICAL COMPONENTS	27F630T		25-BCB470-M1X
C1206	266947	CAP. ELEC 47 UF 16V +/-20%	ELECTRICAL COMPONENTS	27F520T		25-BCB470-M1X
C1211	266969	CAP. CER 0.1 UF 50V +80-20% F	ELECTRICAL COMPONENTS	27V520T		26-ABC104-ZFX
C1211	266969	CAP. CER 0.1 UF 50V +80-20% F	ELECTRICAL COMPONENTS	27F520T		26-ABC104-ZFX

Symbol	Stock	Description	Circuit	Model	TypeCode	Drawing
C1211	266969	CAP. CER 0.1 UF 50V +80-20% F	ELECTRICAL COMPONENTS	27F630T		26-ABC104-ZFX
C1212	266947	CAP. ELEC 47 UF 16V +/-20%	ELECTRICAL COMPONENTS	27F520T		25-BCB470-M1X
C1212	266947	CAP. ELEC 47 UF 16V +/-20%	ELECTRICAL COMPONENTS	27V520T		25-BCB470-M1X
C1212	266947	CAP. ELEC 47 UF 16V +/-20%	ELECTRICAL COMPONENTS	27F630T		25-BCB470-M1X
C1213	266583	CAP. CER 0.01UF 50V +80/-20% F	ELECTRICAL COMPONENTS	27V520T		26-EBP103-ZFX
C1213	266583	CAP. CER 0.01UF 50V +80/-20% F	ELECTRICAL COMPONENTS	27F520T		26-EBP103-ZFX
C1213	266583	CAP. CER 0.01UF 50V +80/-20% F	ELECTRICAL COMPONENTS	27F630T		26-EBP103-ZFX
C1214	266583	CAP. CER 0.01UF 50V +80/-20% F	ELECTRICAL COMPONENTS	27F520T		26-EBP103-ZFX
C1214	266583	CAP. CER 0.01UF 50V +80/-20% F	ELECTRICAL COMPONENTS	27V520T		26-EBP103-ZFX
C1214	266583	CAP. CER 0.01UF 50V +80/-20% F	ELECTRICAL COMPONENTS	27F630T		26-EBP103-ZFX
C1215	266583	CAP. CER 0.01UF 50V +80/-20% F	ELECTRICAL COMPONENTS	27V520T		26-EBP103-ZFX
C1215	266583	CAP. CER 0.01UF 50V +80/-20% F	ELECTRICAL COMPONENTS	27F520T		26-EBP103-ZFX
C1215	266583	CAP. CER 0.01UF 50V +80/-20% F	ELECTRICAL COMPONENTS	27F630T		26-EBP103-ZFX
C1216	266969	CAP. CER 0.1 UF 50V +80-20% F	ELECTRICAL COMPONENTS	27F630T		26-ABC104-ZFX
C1216	266969	CAP. CER 0.1 UF 50V +80-20% F	ELECTRICAL COMPONENTS	27V520T		26-ABC104-ZFX
C1216	266969	CAP. CER 0.1 UF 50V +80-20% F	ELECTRICAL COMPONENTS	27F520T		26-ABC104-ZFX
C1217	266947	CAP. ELEC 47 UF 16V +/-20%	ELECTRICAL COMPONENTS	27F630T		25-BCB470-M1X
C1217	266947	CAP. ELEC 47 UF 16V +/-20%	ELECTRICAL COMPONENTS	27V520T		25-BCB470-M1X
C1217	266947	CAP. ELEC 47 UF 16V +/-20%	ELECTRICAL COMPONENTS	27F520T		25-BCB470-M1X
C1218	266969	CAP. CER 0.1 UF 50V +80-20% F	ELECTRICAL COMPONENTS	27F630T		26-ABC104-ZFX
C1218	266969	CAP. CER 0.1 UF 50V +80-20% F	ELECTRICAL COMPONENTS	27F520T		26-ABC104-ZFX
C1218	266969	CAP. CER 0.1 UF 50V +80-20% F	ELECTRICAL COMPONENTS	27V520T		26-ABC104-ZFX
C1219	266947	CAP. ELEC 47 UF 16V +/-20%	ELECTRICAL COMPONENTS	27F520T		25-BCB470-M1X
C1219	266947	CAP. ELEC 47 UF 16V +/-20%	ELECTRICAL COMPONENTS	27F630T		25-BCB470-M1X
C1219	266947	CAP. ELEC 47 UF 16V +/-20%	ELECTRICAL COMPONENTS	27V520T		25-BCB470-M1X
C1220	268291	CAP. CER 10PF 50V +/-5% CH	ELECTRICAL COMPONENTS	27F630T		26-EBP100-JCX
C1220	268291	CAP. CER 10PF 50V +/-5% CH	ELECTRICAL COMPONENTS	27F520T		26-EBP100-JCX
C1220	268291	CAP. CER 10PF 50V +/-5% CH	ELECTRICAL COMPONENTS	27V520T		26-EBP100-JCX
C1221	268292	CAP. CER 1200PF 50V +/-10%	ELECTRICAL COMPONENTS	27V520T		26-EBP122-KBX
C1221	268292	CAP. CER 1200PF 50V +/-10%	ELECTRICAL COMPONENTS	27F630T		26-EBP122-KBX
C1221	268292	CAP. CER 1200PF 50V +/-10%	ELECTRICAL COMPONENTS	27F520T		26-EBP122-KBX
C1222	268293	CAP. CER 180PF 50V +/-5% CH	ELECTRICAL COMPONENTS	27F630T		26-EBP181-JCX
C1222	268293	CAP. CER 180PF 50V +/-5% CH	ELECTRICAL COMPONENTS	27V520T		26-EBP181-JCX
C1222	268293	CAP. CER 180PF 50V +/-5% CH	ELECTRICAL COMPONENTS	27F520T		26-EBP181-JCX
C1223	266583	CAP. CER 0.01UF 50V +80/-20% F	ELECTRICAL COMPONENTS	27F630T		26-EBP103-ZFX
C1223	266583	CAP. CER 0.01UF 50V +80/-20% F	ELECTRICAL COMPONENTS	27V520T		26-EBP103-ZFX
C1223	266583	CAP. CER 0.01UF 50V +80/-20% F	ELECTRICAL COMPONENTS	27F520T		26-EBP103-ZFX
C1224	266947	CAP. ELEC 47 UF 16V +/-20%	ELECTRICAL COMPONENTS	27F630T		25-BCB470-M1X
C1224	266947	CAP. ELEC 47 UF 16V +/-20%	ELECTRICAL COMPONENTS	27V520T		25-BCB470-M1X
C1224	266947	CAP. ELEC 47 UF 16V +/-20%	ELECTRICAL COMPONENTS	27F520T		25-BCB470-M1X
C1225	266969	CAP. CER 0.1 UF 50V +80-20% F	ELECTRICAL COMPONENTS	27F520T		26-ABC104-ZFX
C1225	266969	CAP. CER 0.1 UF 50V +80-20% F	ELECTRICAL COMPONENTS	27F630T		26-ABC104-ZFX
C1225	266969	CAP. CER 0.1 UF 50V +80-20% F	ELECTRICAL COMPONENTS	27V520T		26-ABC104-ZFX
C1229	266583	CAP. CER 0.01UF 50V +80/-20% F	ELECTRICAL COMPONENTS	27F630T		26-EBP103-ZFX
C1229	266583	CAP. CER 0.01UF 50V +80/-20% F	ELECTRICAL COMPONENTS	27V520T		26-EBP103-ZFX
C1229	266583	CAP. CER 0.01UF 50V +80/-20% F	ELECTRICAL COMPONENTS	27F520T		26-EBP103-ZFX
C1230	266583	CAP. CER 0.01UF 50V +80/-20% F	ELECTRICAL COMPONENTS	27F520T		26-EBP103-ZFX
C1230	266583	CAP. CER 0.01UF 50V +80/-20% F	ELECTRICAL COMPONENTS	27V520T		26-EBP103-ZFX
C1230	266583	CAP. CER 0.01UF 50V +80/-20% F	ELECTRICAL COMPONENTS	27F630T		26-EBP103-ZFX
C1231	268294	CAP. CER 47PF 50V +/-5% CH	ELECTRICAL COMPONENTS	27V520T		26-EBP470-JCX
C1231	268294	CAP. CER 47PF 50V +/-5% CH	ELECTRICAL COMPONENTS	27F630T		26-EBP470-JCX
C1231	268294	CAP. CER 47PF 50V +/-5% CH	ELECTRICAL COMPONENTS	27F520T		26-EBP470-JCX
C1233	266582	CAP. CER 1000 PF 50V +/-10% B	ELECTRICAL COMPONENTS	27V520T		26-EBP102-KBX
C1233	266582	CAP. CER 1000 PF 50V +/-10% B	ELECTRICAL COMPONENTS	27F520T		26-EBP102-KBX
C1233	266582	CAP. CER 1000 PF 50V +/-10% B	ELECTRICAL COMPONENTS	27F630T		26-EBP102-KBX
C1234	268295	CAP. CER 33PF 50V +/-5% CH	ELECTRICAL COMPONENTS	27F520T		26-EBP330-JCX
C1234	268295	CAP. CER 33PF 50V +/-5% CH	ELECTRICAL COMPONENTS	27V520T		26-EBP330-JCX
C1234	268295	CAP. CER 33PF 50V +/-5% CH	ELECTRICAL COMPONENTS	27F630T		26-EBP330-JCX
C1235	268295	CAP. CER 33PF 50V +/-5% CH	ELECTRICAL COMPONENTS	27F630T		26-EBP330-JCX
C1235	268295	CAP. CER 33PF 50V +/-5% CH	ELECTRICAL COMPONENTS	27F520T		26-EBP330-JCX

Symbol	Stock	Description	Circuit	Model	TypeCode	Drawing
C1235	268295	CAP. CER 33PF 50V +/-5% CH	ELECTRICAL COMPONENTS	27V520T		26-EBP330-JCX
C1236	266958	CAP. ELEC 0.47 UF 50V +/-20%	ELECTRICAL COMPONENTS	27F630T		25-BFB478-M1X
C1236	266958	CAP. ELEC 0.47 UF 50V +/-20%	ELECTRICAL COMPONENTS	27V520T		25-BFB478-M1X
C1236	266958	CAP. ELEC 0.47 UF 50V +/-20%	ELECTRICAL COMPONENTS	27F520T		25-BFB478-M1X
C209	266581	CAP. ELEC 10 UF 16V +/-20%	ELECTRICAL COMPONENTS	27V520T		25-BCB100-M1X
C209	266581	CAP. ELEC 10 UF 16V +/-20%	ELECTRICAL COMPONENTS	27V513T		25-BCB100-M1X
C209	266581	CAP. ELEC 10 UF 16V +/-20%	ELECTRICAL COMPONENTS	27V512T		25-BCB100-M1X
C209	266581	CAP. ELEC 10 UF 16V +/-20%	ELECTRICAL COMPONENTS	24F512T		25-BCB100-M1X
C209	266581	CAP. ELEC 10 UF 16V +/-20%	ELECTRICAL COMPONENTS	27F520T		25-BCB100-M1X
C209	266581	CAP. ELEC 10 UF 16V +/-20%	ELECTRICAL COMPONENTS	24V511T		25-BCB100-M1X
C209	266581	CAP. ELEC 10 UF 16V +/-20%	ELECTRICAL COMPONENTS	27F630T		25-BCB100-M1X
C210	268296	CAP. ELEC 33 UF 16V +/-20%	ELECTRICAL COMPONENTS	27V520T		25-BCB330-M1X
C210	268296	CAP. ELEC 33 UF 16V +/-20%	ELECTRICAL COMPONENTS	27F630T		25-BCB330-M1X
C210	268296	CAP. ELEC 33 UF 16V +/-20%	ELECTRICAL COMPONENTS	24V511T		25-BCB330-M1X
C210	268296	CAP. ELEC 33 UF 16V +/-20%	ELECTRICAL COMPONENTS	27V512T		25-BCB330-M1X
C210	268296	CAP. ELEC 33 UF 16V +/-20%	ELECTRICAL COMPONENTS	24F512T		25-BCB330-M1X
C210	268296	CAP. ELEC 33 UF 16V +/-20%	ELECTRICAL COMPONENTS	27V513T		25-BCB330-M1X
C210	268296	CAP. ELEC 33 UF 16V +/-20%	ELECTRICAL COMPONENTS	27F520T		25-BCB330-M1X
C211	268297	CAP. ELEC 0.1 UF 50V +/-20%	ELECTRICAL COMPONENTS	27V512T		25-BFB108-M1X
C211	268297	CAP. ELEC 0.1 UF 50V +/-20%	ELECTRICAL COMPONENTS	27V513T		25-BFB108-M1X
C211	268297	CAP. ELEC 0.1 UF 50V +/-20%	ELECTRICAL COMPONENTS	27F520T		25-BFB108-M1X
C211	268297	CAP. ELEC 0.1 UF 50V +/-20%	ELECTRICAL COMPONENTS	27V520T		25-BFB108-M1X
C211	268297	CAP. ELEC 0.1 UF 50V +/-20%	ELECTRICAL COMPONENTS	24F512T		25-BFB108-M1X
C211	268297	CAP. ELEC 0.1 UF 50V +/-20%	ELECTRICAL COMPONENTS	27F630T		25-BFB108-M1X
C211	268297	CAP. ELEC 0.1 UF 50V +/-20%	ELECTRICAL COMPONENTS	24V511T		25-BFB108-M1X
C212	266285	RES. C.F. 4.7K OHM 1/6W +/-5%	ELECTRICAL COMPONENTS	27V513T		18-CB0472-JNX
C212	266285	RES. C.F. 4.7K OHM 1/6W +/-5%	ELECTRICAL COMPONENTS	24F512T		18-CB0472-JNX
C212	266285	RES. C.F. 4.7K OHM 1/6W +/-5%	ELECTRICAL COMPONENTS	24V511T		18-CB0472-JNX
C212	266285	RES. C.F. 4.7K OHM 1/6W +/-5%	ELECTRICAL COMPONENTS	27F520T		18-CB0472-JNX
C212	266285	RES. C.F. 4.7K OHM 1/6W +/-5%	ELECTRICAL COMPONENTS	27F630T		18-CB0472-JNX
C212	266285	RES. C.F. 4.7K OHM 1/6W +/-5%	ELECTRICAL COMPONENTS	27V512T		18-CB0472-JNX
C212	266285	RES. C.F. 4.7K OHM 1/6W +/-5%	ELECTRICAL COMPONENTS	27V520T		18-CB0472-JNX
C213	266947	CAP. ELEC 47 UF 16V +/-20%	ELECTRICAL COMPONENTS	27V520T		25-BCB470-M1X
C213	266947	CAP. ELEC 47 UF 16V +/-20%	ELECTRICAL COMPONENTS	27V512T		25-BCB470-M1X
C213	266947	CAP. ELEC 47 UF 16V +/-20%	ELECTRICAL COMPONENTS	24V511T		25-BCB470-M1X
C213	266947	CAP. ELEC 47 UF 16V +/-20%	ELECTRICAL COMPONENTS	27V513T		25-BCB470-M1X
C213	266947	CAP. ELEC 47 UF 16V +/-20%	ELECTRICAL COMPONENTS	27F520T		25-BCB470-M1X
C213	266947	CAP. ELEC 47 UF 16V +/-20%	ELECTRICAL COMPONENTS	24F512T		25-BCB470-M1X
C213	266947	CAP. ELEC 47 UF 16V +/-20%	ELECTRICAL COMPONENTS	27F630T		25-BCB470-M1X
C214	266583	CAP. CER 0.01UF 50V +80/-20% F	ELECTRICAL COMPONENTS	27F520T		26-EBP103-ZFX
C214	266583	CAP. CER 0.01UF 50V +80/-20% F	ELECTRICAL COMPONENTS	27V513T		26-EBP103-ZFX
C214	266583	CAP. CER 0.01UF 50V +80/-20% F	ELECTRICAL COMPONENTS	27F630T		26-EBP103-ZFX
C214	266583	CAP. CER 0.01UF 50V +80/-20% F	ELECTRICAL COMPONENTS	24F512T		26-EBP103-ZFX
C214	266583	CAP. CER 0.01UF 50V +80/-20% F	ELECTRICAL COMPONENTS	27V520T		26-EBP103-ZFX
C214	266583	CAP. CER 0.01UF 50V +80/-20% F	ELECTRICAL COMPONENTS	24V511T		26-EBP103-ZFX
C214	266583	CAP. CER 0.01UF 50V +80/-20% F	ELECTRICAL COMPONENTS	27V512T		26-EBP103-ZFX
C216	266965	CAP. ELEC 0.22 UF 50V +/-10%	ELECTRICAL COMPONENTS	24V511T		25-GFB228-K1X
C216	266965	CAP. ELEC 0.22 UF 50V +/-10%	ELECTRICAL COMPONENTS	24F512T		25-GFB228-K1X
C216	266965	CAP. ELEC 0.22 UF 50V +/-10%	ELECTRICAL COMPONENTS	27V513T		25-GFB228-K1X
C216	266965	CAP. ELEC 0.22 UF 50V +/-10%	ELECTRICAL COMPONENTS	27F630T		25-GFB228-K1X
C216	266965	CAP. ELEC 0.22 UF 50V +/-10%	ELECTRICAL COMPONENTS	27V512T		25-GFB228-K1X
C216	266965	CAP. ELEC 0.22 UF 50V +/-10%	ELECTRICAL COMPONENTS	27F520T		25-GFB228-K1X
C216	266965	CAP. ELEC 0.22 UF 50V +/-10%	ELECTRICAL COMPONENTS	27V520T		25-GFB228-K1X
C217	268298	CAP. CER 2200PF 50V +/-10% B	ELECTRICAL COMPONENTS	27V512T		26-EBP222-KBX
C217	268298	CAP. CER 2200PF 50V +/-10% B	ELECTRICAL COMPONENTS	27V520T		26-EBP222-KBX
C217	268298	CAP. CER 2200PF 50V +/-10% B	ELECTRICAL COMPONENTS	27F630T		26-EBP222-KBX
C217	268298	CAP. CER 2200PF 50V +/-10% B	ELECTRICAL COMPONENTS	24V511T		26-EBP222-KBX
C217	268298	CAP. CER 2200PF 50V +/-10% B	ELECTRICAL COMPONENTS	27V513T		26-EBP222-KBX
C217	268298	CAP. CER 2200PF 50V +/-10% B	ELECTRICAL COMPONENTS	27F520T		26-EBP222-KBX
C217	268298	CAP. CER 2200PF 50V +/-10% B	ELECTRICAL COMPONENTS	24F512T		26-EBP222-KBX

Symbol	Stock	Description	Circuit	Model	TypeCode	Drawing
C218	266955	CAP. ELEC 1 UF 50V +/-20%	ELECTRICAL COMPONENTS	27V513T		25-BFB109-M1X
C218	266955	CAP. ELEC 1 UF 50V +/-20%	ELECTRICAL COMPONENTS	24F512T		25-BFB109-M1X
C218	266955	CAP. ELEC 1 UF 50V +/-20%	ELECTRICAL COMPONENTS	27V520T		25-BFB109-M1X
C218	266955	CAP. ELEC 1 UF 50V +/-20%	ELECTRICAL COMPONENTS	27F630T		25-BFB109-M1X
C218	266955	CAP. ELEC 1 UF 50V +/-20%	ELECTRICAL COMPONENTS	27F520T		25-BFB109-M1X
C218	266955	CAP. ELEC 1 UF 50V +/-20%	ELECTRICAL COMPONENTS	24V511T		25-BFB109-M1X
C218	266955	CAP. ELEC 1 UF 50V +/-20%	ELECTRICAL COMPONENTS	27V512T		25-BFB109-M1X
C219	266598	CAP. ELEC 100 UF 16V +/-20%	ELECTRICAL COMPONENTS	27V520T		25-BCB101-M1X
C219	266598	CAP. ELEC 100 UF 16V +/-20%	ELECTRICAL COMPONENTS	27V513T		25-BCB101-M1X
C219	266598	CAP. ELEC 100 UF 16V +/-20%	ELECTRICAL COMPONENTS	24F512T		25-BCB101-M1X
C219	266598	CAP. ELEC 100 UF 16V +/-20%	ELECTRICAL COMPONENTS	27V512T		25-BCB101-M1X
C219	266598	CAP. ELEC 100 UF 16V +/-20%	ELECTRICAL COMPONENTS	27F630T		25-BCB101-M1X
C219	266598	CAP. ELEC 100 UF 16V +/-20%	ELECTRICAL COMPONENTS	24V511T		25-BCB101-M1X
C219	266598	CAP. ELEC 100 UF 16V +/-20%	ELECTRICAL COMPONENTS	27F520T		25-BCB101-M1X
C220	266583	CAP. CER 0.01UF 50V +80/-20% F	ELECTRICAL COMPONENTS	27V520T		26-EBP103-ZFX
C220	266583	CAP. CER 0.01UF 50V +80/-20% F	ELECTRICAL COMPONENTS	24F512T		26-EBP103-ZFX
C220	266583	CAP. CER 0.01UF 50V +80/-20% F	ELECTRICAL COMPONENTS	27F630T		26-EBP103-ZFX
C220	266583	CAP. CER 0.01UF 50V +80/-20% F	ELECTRICAL COMPONENTS	27F520T		26-EBP103-ZFX
C220	266583	CAP. CER 0.01UF 50V +80/-20% F	ELECTRICAL COMPONENTS	27V512T		26-EBP103-ZFX
C220	266583	CAP. CER 0.01UF 50V +80/-20% F	ELECTRICAL COMPONENTS	24V511T		26-EBP103-ZFX
C220	266583	CAP. CER 0.01UF 50V +80/-20% F	ELECTRICAL COMPONENTS	27V513T		26-EBP103-ZFX
C221	266955	CAP. ELEC 1 UF 50V +/-20%	ELECTRICAL COMPONENTS	27F520T		25-BFB109-M1X
C221	266955	CAP. ELEC 1 UF 50V +/-20%	ELECTRICAL COMPONENTS	27V512T		25-BFB109-M1X
C221	266955	CAP. ELEC 1 UF 50V +/-20%	ELECTRICAL COMPONENTS	27V513T		25-BFB109-M1X
C221	266955	CAP. ELEC 1 UF 50V +/-20%	ELECTRICAL COMPONENTS	27V520T		25-BFB109-M1X
C221	266955	CAP. ELEC 1 UF 50V +/-20%	ELECTRICAL COMPONENTS	27F630T		25-BFB109-M1X
C221	266955	CAP. ELEC 1 UF 50V +/-20%	ELECTRICAL COMPONENTS	24F512T		25-BFB109-M1X
C221	266955	CAP. ELEC 1 UF 50V +/-20%	ELECTRICAL COMPONENTS	24V511T		25-BFB109-M1X
C223	268299	CAP. ELEC 4.7 UF 25V +/-20%	ELECTRICAL COMPONENTS	27F520T		25-BDB479-M1X
C223	268299	CAP. ELEC 4.7 UF 25V +/-20%	ELECTRICAL COMPONENTS	24F512T		25-BDB479-M1X
C223	268299	CAP. ELEC 4.7 UF 25V +/-20%	ELECTRICAL COMPONENTS	27V512T		25-BDB479-M1X
C223	268299	CAP. ELEC 4.7 UF 25V +/-20%	ELECTRICAL COMPONENTS	27V520T		25-BDB479-M1X
C223	268299	CAP. ELEC 4.7 UF 25V +/-20%	ELECTRICAL COMPONENTS	24V511T		25-BDB479-M1X
C223	268299	CAP. ELEC 4.7 UF 25V +/-20%	ELECTRICAL COMPONENTS	27V513T		25-BDB479-M1X
C223	268299	CAP. ELEC 4.7 UF 25V +/-20%	ELECTRICAL COMPONENTS	27F630T		25-BDB479-M1X
C224	268300	CAP. ELEC 100 UF 25V +/-20%	ELECTRICAL COMPONENTS	24V511T		25-BDB101-M1X
C224	268300	CAP. ELEC 100 UF 25V +/-20%	ELECTRICAL COMPONENTS	24F512T		25-BDB101-M1X
C224	268300	CAP. ELEC 100 UF 25V +/-20%	ELECTRICAL COMPONENTS	27F630T		25-BDB101-M1X
C224	268300	CAP. ELEC 100 UF 25V +/-20%	ELECTRICAL COMPONENTS	27V520T		25-BDB101-M1X
C224	268300	CAP. ELEC 100 UF 25V +/-20%	ELECTRICAL COMPONENTS	27V513T		25-BDB101-M1X
C224	268300	CAP. ELEC 100 UF 25V +/-20%	ELECTRICAL COMPONENTS	27F520T		25-BDB101-M1X
C224	268300	CAP. ELEC 100 UF 25V +/-20%	ELECTRICAL COMPONENTS	27V512T		25-BDB101-M1X
C225	266583	CAP. CER 0.01UF 50V +80/-20% F	ELECTRICAL COMPONENTS	24F512T		26-EBP103-ZFX
C225	266583	CAP. CER 0.01UF 50V +80/-20% F	ELECTRICAL COMPONENTS	27F630T		26-EBP103-ZFX
C225	266583	CAP. CER 0.01UF 50V +80/-20% F	ELECTRICAL COMPONENTS	24V511T		26-EBP103-ZFX
C225	266583	CAP. CER 0.01UF 50V +80/-20% F	ELECTRICAL COMPONENTS	27F520T		26-EBP103-ZFX
C225	266583	CAP. CER 0.01UF 50V +80/-20% F	ELECTRICAL COMPONENTS	27V520T		26-EBP103-ZFX
C225	266583	CAP. CER 0.01UF 50V +80/-20% F	ELECTRICAL COMPONENTS	27V512T		26-EBP103-ZFX
C225	266583	CAP. CER 0.01UF 50V +80/-20% F	ELECTRICAL COMPONENTS	27V513T		26-EBP103-ZFX
C226	266582	CAP. CER 1000 PF 50V +/-10% B	ELECTRICAL COMPONENTS	27F520T		26-EBP102-KBX
C226	266582	CAP. CER 1000 PF 50V +/-10% B	ELECTRICAL COMPONENTS	24F512T		26-EBP102-KBX
C226	266582	CAP. CER 1000 PF 50V +/-10% B	ELECTRICAL COMPONENTS	27V520T		26-EBP102-KBX
C226	266582	CAP. CER 1000 PF 50V +/-10% B	ELECTRICAL COMPONENTS	27V512T		26-EBP102-KBX
C226	266582	CAP. CER 1000 PF 50V +/-10% B	ELECTRICAL COMPONENTS	27V513T		26-EBP102-KBX
C226	266582	CAP. CER 1000 PF 50V +/-10% B	ELECTRICAL COMPONENTS	24V511T		26-EBP102-KBX
C226	266582	CAP. CER 1000 PF 50V +/-10% B	ELECTRICAL COMPONENTS	27F630T		26-EBP102-KBX
C227	266958	CAP. ELEC 0.47 UF 50V +/-20%	ELECTRICAL COMPONENTS	27V512T		25-BFB478-M1X
C227	266958	CAP. ELEC 0.47 UF 50V +/-20%	ELECTRICAL COMPONENTS	27F520T		25-BFB478-M1X
C227	266958	CAP. ELEC 0.47 UF 50V +/-20%	ELECTRICAL COMPONENTS	27V520T		25-BFB478-M1X
C227	266958	CAP. ELEC 0.47 UF 50V +/-20%	ELECTRICAL COMPONENTS	27V513T		25-BFB478-M1X

Symbol	Stock	Description	Circuit	Model	TypeCode	Drawing
C227	266958	CAP. ELEC 0.47 UF 50V +/-20%	ELECTRICAL COMPONENTS	24V511T		25-BFB478-M1X
C227	266958	CAP. ELEC 0.47 UF 50V +/-20%	ELECTRICAL COMPONENTS	24F512T		25-BFB478-M1X
C227	266958	CAP. ELEC 0.47 UF 50V +/-20%	ELECTRICAL COMPONENTS	27F630T		25-BFB478-M1X
C228	266581	CAP. ELEC 10 UF 16V +/-20%	ELECTRICAL COMPONENTS	27V512T		25-BCB100-M1X
C228	266581	CAP. ELEC 10 UF 16V +/-20%	ELECTRICAL COMPONENTS	27V513T		25-BCB100-M1X
C228	266581	CAP. ELEC 10 UF 16V +/-20%	ELECTRICAL COMPONENTS	24F512T		25-BCB100-M1X
C228	266581	CAP. ELEC 10 UF 16V +/-20%	ELECTRICAL COMPONENTS	27V520T		25-BCB100-M1X
C228	266581	CAP. ELEC 10 UF 16V +/-20%	ELECTRICAL COMPONENTS	24V511T		25-BCB100-M1X
C228	266581	CAP. ELEC 10 UF 16V +/-20%	ELECTRICAL COMPONENTS	27F630T		25-BCB100-M1X
C228	266581	CAP. ELEC 10 UF 16V +/-20%	ELECTRICAL COMPONENTS	27F520T		25-BCB100-M1X
C229	266947	CAP. ELEC 47 UF 16V +/-20%	ELECTRICAL COMPONENTS	27F520T		25-BCB470-M1X
C229	266947	CAP. ELEC 47 UF 16V +/-20%	ELECTRICAL COMPONENTS	27V520T		25-BCB470-M1X
C229	266947	CAP. ELEC 47 UF 16V +/-20%	ELECTRICAL COMPONENTS	24V511T		25-BCB470-M1X
C229	266947	CAP. ELEC 47 UF 16V +/-20%	ELECTRICAL COMPONENTS	27V512T		25-BCB470-M1X
C229	266947	CAP. ELEC 47 UF 16V +/-20%	ELECTRICAL COMPONENTS	24F512T		25-BCB470-M1X
C229	266947	CAP. ELEC 47 UF 16V +/-20%	ELECTRICAL COMPONENTS	27V513T		25-BCB470-M1X
C229	266947	CAP. ELEC 47 UF 16V +/-20%	ELECTRICAL COMPONENTS	27F630T		25-BCB470-M1X
C230	266969	CAP. CER 0.1 UF 50V +80-20% F	ELECTRICAL COMPONENTS	27V512T		26-ABC104-ZFX
C230	266969	CAP. CER 0.1 UF 50V +80-20% F	ELECTRICAL COMPONENTS	24F512T		26-ABC104-ZFX
C230	266969	CAP. CER 0.1 UF 50V +80-20% F	ELECTRICAL COMPONENTS	24V511T		26-ABC104-ZFX
C230	266969	CAP. CER 0.1 UF 50V +80-20% F	ELECTRICAL COMPONENTS	27V513T		26-ABC104-ZFX
C230	266969	CAP. CER 0.1 UF 50V +80-20% F	ELECTRICAL COMPONENTS	27F630T		26-ABC104-ZFX
C230	266969	CAP. CER 0.1 UF 50V +80-20% F	ELECTRICAL COMPONENTS	27F520T		26-ABC104-ZFX
C230	266969	CAP. CER 0.1 UF 50V +80-20% F	ELECTRICAL COMPONENTS	27V520T		26-ABC104-ZFX
C231	268298	CAP. CER 2200PF 50V +/-10% B	ELECTRICAL COMPONENTS	27V513T		26-EBP222-KBX
C231	268298	CAP. CER 2200PF 50V +/-10% B	ELECTRICAL COMPONENTS	27F520T		26-EBP222-KBX
C231	268298	CAP. CER 2200PF 50V +/-10% B	ELECTRICAL COMPONENTS	24F512T		26-EBP222-KBX
C231	268298	CAP. CER 2200PF 50V +/-10% B	ELECTRICAL COMPONENTS	27V512T		26-EBP222-KBX
C231	268298	CAP. CER 2200PF 50V +/-10% B	ELECTRICAL COMPONENTS	24V511T		26-EBP222-KBX
C231	268298	CAP. CER 2200PF 50V +/-10% B	ELECTRICAL COMPONENTS	27F630T		26-EBP222-KBX
C231	268298	CAP. CER 2200PF 50V +/-10% B	ELECTRICAL COMPONENTS	27V520T		26-EBP222-KBX
C233	266598	CAP. ELEC 100 UF 16V +/-20%	ELECTRICAL COMPONENTS	24V511T		25-BCB101-M1X
C233	266598	CAP. ELEC 100 UF 16V +/-20%	ELECTRICAL COMPONENTS	27V520T		25-BCB101-M1X
C233	266598	CAP. ELEC 100 UF 16V +/-20%	ELECTRICAL COMPONENTS	27V512T		25-BCB101-M1X
C233	266598	CAP. ELEC 100 UF 16V +/-20%	ELECTRICAL COMPONENTS	27V513T		25-BCB101-M1X
C233	266598	CAP. ELEC 100 UF 16V +/-20%	ELECTRICAL COMPONENTS	27F520T		25-BCB101-M1X
C233	266598	CAP. ELEC 100 UF 16V +/-20%	ELECTRICAL COMPONENTS	27F630T		25-BCB101-M1X
C233	266598	CAP. ELEC 100 UF 16V +/-20%	ELECTRICAL COMPONENTS	24F512T		25-BCB101-M1X
C234	266583	CAP. CER 0.01UF 50V +80/-20% F	ELECTRICAL COMPONENTS	27V512T		26-EBP103-ZFX
C234	266583	CAP. CER 0.01UF 50V +80/-20% F	ELECTRICAL COMPONENTS	24F512T		26-EBP103-ZFX
C234	266583	CAP. CER 0.01UF 50V +80/-20% F	ELECTRICAL COMPONENTS	24V511T		26-EBP103-ZFX
C234	266583	CAP. CER 0.01UF 50V +80/-20% F	ELECTRICAL COMPONENTS	27F630T		26-EBP103-ZFX
C234	266583	CAP. CER 0.01UF 50V +80/-20% F	ELECTRICAL COMPONENTS	27V513T		26-EBP103-ZFX
C234	266583	CAP. CER 0.01UF 50V +80/-20% F	ELECTRICAL COMPONENTS	27F520T		26-EBP103-ZFX
C234	266583	CAP. CER 0.01UF 50V +80/-20% F	ELECTRICAL COMPONENTS	27V520T		26-EBP103-ZFX
C235	268296	CAP. ELEC 33 UF 16V +/-20%	ELECTRICAL COMPONENTS	24F512T		25-BCB330-M1X
C235	268296	CAP. ELEC 33 UF 16V +/-20%	ELECTRICAL COMPONENTS	27V520T		25-BCB330-M1X
C235	268296	CAP. ELEC 33 UF 16V +/-20%	ELECTRICAL COMPONENTS	24V511T		25-BCB330-M1X
C235	268296	CAP. ELEC 33 UF 16V +/-20%	ELECTRICAL COMPONENTS	27F520T		25-BCB330-M1X
C235	268296	CAP. ELEC 33 UF 16V +/-20%	ELECTRICAL COMPONENTS	27V513T		25-BCB330-M1X
C235	268296	CAP. ELEC 33 UF 16V +/-20%	ELECTRICAL COMPONENTS	27F630T		25-BCB330-M1X
C235	268296	CAP. ELEC 33 UF 16V +/-20%	ELECTRICAL COMPONENTS	27V512T		25-BCB330-M1X
C236	266583	CAP. CER 0.01UF 50V +80/-20% F	ELECTRICAL COMPONENTS	27F630T		26-EBP103-ZFX
C236	266583	CAP. CER 0.01UF 50V +80/-20% F	ELECTRICAL COMPONENTS	24V511T		26-EBP103-ZFX
C236	266583	CAP. CER 0.01UF 50V +80/-20% F	ELECTRICAL COMPONENTS	27V512T		26-EBP103-ZFX
C236	266583	CAP. CER 0.01UF 50V +80/-20% F	ELECTRICAL COMPONENTS	27F520T		26-EBP103-ZFX
C236	266583	CAP. CER 0.01UF 50V +80/-20% F	ELECTRICAL COMPONENTS	24F512T		26-EBP103-ZFX
C236	266583	CAP. CER 0.01UF 50V +80/-20% F	ELECTRICAL COMPONENTS	27V520T		26-EBP103-ZFX
C236	266583	CAP. CER 0.01UF 50V +80/-20% F	ELECTRICAL COMPONENTS	27V513T		26-EBP103-ZFX
C237	266954	CAP. ELEC 10 UF 50V +/-20%	ELECTRICAL COMPONENTS	24F512T		25-BFB100-M1X

Symbol	Stock	Description	Circuit	Model	TypeCode	Drawing
C237	266954	CAP. ELEC 10 UF 50V +/-20%	ELECTRICAL COMPONENTS	27V513T		25-BFB100-M1X
C237	266954	CAP. ELEC 10 UF 50V +/-20%	ELECTRICAL COMPONENTS	27F630T		25-BFB100-M1X
C237	266954	CAP. ELEC 10 UF 50V +/-20%	ELECTRICAL COMPONENTS	27F520T		25-BFB100-M1X
C237	266954	CAP. ELEC 10 UF 50V +/-20%	ELECTRICAL COMPONENTS	27V512T		25-BFB100-M1X
C237	266954	CAP. ELEC 10 UF 50V +/-20%	ELECTRICAL COMPONENTS	24V511T		25-BFB100-M1X
C237	266954	CAP. ELEC 10 UF 50V +/-20%	ELECTRICAL COMPONENTS	27V520T		25-BFB100-M1X
C238	266997	CAP. M.P.E 0.1 UF 63V +/-5%	ELECTRICAL COMPONENTS	27V520T		27-MBC104-J0X
C238	266997	CAP. M.P.E 0.1 UF 63V +/-5%	ELECTRICAL COMPONENTS	24F512T		27-MBC104-J0X
C238	266997	CAP. M.P.E 0.1 UF 63V +/-5%	ELECTRICAL COMPONENTS	27V512T		27-MBC104-J0X
C238	266997	CAP. M.P.E 0.1 UF 63V +/-5%	ELECTRICAL COMPONENTS	24V511T		27-MBC104-J0X
C238	266997	CAP. M.P.E 0.1 UF 63V +/-5%	ELECTRICAL COMPONENTS	27V513T		27-MBC104-J0X
C238	266997	CAP. M.P.E 0.1 UF 63V +/-5%	ELECTRICAL COMPONENTS	27F630T		27-MBC104-J0X
C238	266997	CAP. M.P.E 0.1 UF 63V +/-5%	ELECTRICAL COMPONENTS	27F520T		27-MBC104-J0X
C239	266990	CAP. CER 470PF 50V +/-5% CH	ELECTRICAL COMPONENTS	27F630T		26-EBP471-JCX
C239	266990	CAP. CER 470PF 50V +/-5% CH	ELECTRICAL COMPONENTS	27F520T		26-EBP471-JCX
C239	266990	CAP. CER 470PF 50V +/-5% CH	ELECTRICAL COMPONENTS	24V511T		26-EBP471-JCX
C239	266990	CAP. CER 470PF 50V +/-5% CH	ELECTRICAL COMPONENTS	27V520T		26-EBP471-JCX
C239	266990	CAP. CER 470PF 50V +/-5% CH	ELECTRICAL COMPONENTS	27V512T		26-EBP471-JCX
C239	266990	CAP. CER 470PF 50V +/-5% CH	ELECTRICAL COMPONENTS	27V513T		26-EBP471-JCX
C239	266990	CAP. CER 470PF 50V +/-5% CH	ELECTRICAL COMPONENTS	24F512T		26-EBP471-JCX
C241	266955	CAP. ELEC 1 UF 50V +/-20%	ELECTRICAL COMPONENTS	27F520T		25-BFB109-M1X
C241	266955	CAP. ELEC 1 UF 50V +/-20%	ELECTRICAL COMPONENTS	24F512T		25-BFB109-M1X
C241	266955	CAP. ELEC 1 UF 50V +/-20%	ELECTRICAL COMPONENTS	27F630T		25-BFB109-M1X
C241	266955	CAP. ELEC 1 UF 50V +/-20%	ELECTRICAL COMPONENTS	27V520T		25-BFB109-M1X
C242	266997	CAP. M.P.E 0.1 UF 63V +/-5%	ELECTRICAL COMPONENTS	24F512T		27-MBC104-J0X
C242	266997	CAP. M.P.E 0.1 UF 63V +/-5%	ELECTRICAL COMPONENTS	27V513T		27-MBC104-J0X
C242	266997	CAP. M.P.E 0.1 UF 63V +/-5%	ELECTRICAL COMPONENTS	24V511T		27-MBC104-J0X
C242	266997	CAP. M.P.E 0.1 UF 63V +/-5%	ELECTRICAL COMPONENTS	27V512T		27-MBC104-J0X
C242	266997	CAP. M.P.E 0.1 UF 63V +/-5%	ELECTRICAL COMPONENTS	27F520T		27-MBC104-J0X
C242	266997	CAP. M.P.E 0.1 UF 63V +/-5%	ELECTRICAL COMPONENTS	27V520T		27-MBC104-J0X
C242	266997	CAP. M.P.E 0.1 UF 63V +/-5%	ELECTRICAL COMPONENTS	27F630T		27-MBC104-J0X
C243	266955	CAP. ELEC 1 UF 50V +/-20%	ELECTRICAL COMPONENTS	27V520T		25-BFB109-M1X
C243	266955	CAP. ELEC 1 UF 50V +/-20%	ELECTRICAL COMPONENTS	27F520T		25-BFB109-M1X
C243	266955	CAP. ELEC 1 UF 50V +/-20%	ELECTRICAL COMPONENTS	27F630T		25-BFB109-M1X
C243	266955	CAP. ELEC 1 UF 50V +/-20%	ELECTRICAL COMPONENTS	24F512T		25-BFB109-M1X
C244	266583	CAP. CER 0.01UF 50V +80/-20% F	ELECTRICAL COMPONENTS	24F512T		26-EBP103-ZFX
C244	266583	CAP. CER 0.01UF 50V +80/-20% F	ELECTRICAL COMPONENTS	24V511T		26-EBP103-ZFX
C244	266583	CAP. CER 0.01UF 50V +80/-20% F	ELECTRICAL COMPONENTS	27F520T		26-EBP103-ZFX
C244	266583	CAP. CER 0.01UF 50V +80/-20% F	ELECTRICAL COMPONENTS	27V513T		26-EBP103-ZFX
C244	266583	CAP. CER 0.01UF 50V +80/-20% F	ELECTRICAL COMPONENTS	27V520T		26-EBP103-ZFX
C244	266583	CAP. CER 0.01UF 50V +80/-20% F	ELECTRICAL COMPONENTS	27V512T		26-EBP103-ZFX
C244	266583	CAP. CER 0.01UF 50V +80/-20% F	ELECTRICAL COMPONENTS	27F630T		26-EBP103-ZFX
C245	268301	CAP. ELEC 330 UF 16V +/-20%	ELECTRICAL COMPONENTS	24F512T		25-BCB331-M1X
C245	268301	CAP. ELEC 330 UF 16V +/-20%	ELECTRICAL COMPONENTS	24V511T		25-BCB331-M1X
C245	268301	CAP. ELEC 330 UF 16V +/-20%	ELECTRICAL COMPONENTS	27V513T		25-BCB331-M1X
C245	268301	CAP. ELEC 330 UF 16V +/-20%	ELECTRICAL COMPONENTS	27F630T		25-BCB331-M1X
C245	268301	CAP. ELEC 330 UF 16V +/-20%	ELECTRICAL COMPONENTS	27V512T		25-BCB331-M1X
C245	268301	CAP. ELEC 330 UF 16V +/-20%	ELECTRICAL COMPONENTS	27V520T		25-BCB331-M1X
C245	268301	CAP. ELEC 330 UF 16V +/-20%	ELECTRICAL COMPONENTS	27F520T		25-BCB331-M1X
C246	266966	CAP. ELEC 0.47 UF 50V +/-10%	ELECTRICAL COMPONENTS	27V512T		25-GFB478-K1X
C246	266966	CAP. ELEC 0.47 UF 50V +/-10%	ELECTRICAL COMPONENTS	27F630T		25-GFB478-K1X
C246	266966	CAP. ELEC 0.47 UF 50V +/-10%	ELECTRICAL COMPONENTS	27F520T		25-GFB478-K1X
C246	266966	CAP. ELEC 0.47 UF 50V +/-10%	ELECTRICAL COMPONENTS	24V511T		25-GFB478-K1X
C246	266966	CAP. ELEC 0.47 UF 50V +/-10%	ELECTRICAL COMPONENTS	27V520T		25-GFB478-K1X
C246	266966	CAP. ELEC 0.47 UF 50V +/-10%	ELECTRICAL COMPONENTS	27V513T		25-GFB478-K1X
C246	266966	CAP. ELEC 0.47 UF 50V +/-10%	ELECTRICAL COMPONENTS	24F512T		25-GFB478-K1X
C247	267003	CAP. P.E 0.0082UF 63V +/-5%	ELECTRICAL COMPONENTS	27V520T		27-PBC822-J0X
C247	267003	CAP. P.E 0.0082UF 63V +/-5%	ELECTRICAL COMPONENTS	24V511T		27-PBC822-J0X
C247	267003	CAP. P.E 0.0082UF 63V +/-5%	ELECTRICAL COMPONENTS	27V513T		27-PBC822-J0X
C247	267003	CAP. P.E 0.0082UF 63V +/-5%	ELECTRICAL COMPONENTS	27F630T		27-PBC822-J0X

Symbol	Stock	Description	Circuit	Model	TypeCode	Drawing
C247	267003	CAP. P.E 0.0082UF 63V +/-5%	ELECTRICAL COMPONENTS	27F520T		27-PBC822-J0X
C247	267003	CAP. P.E 0.0082UF 63V +/-5%	ELECTRICAL COMPONENTS	24F512T		27-PBC822-J0X
C247	267003	CAP. P.E 0.0082UF 63V +/-5%	ELECTRICAL COMPONENTS	27V512T		27-PBC822-J0X
C248	266966	CAP. ELEC 0.47 UF 50V +/-10%	ELECTRICAL COMPONENTS	27F520T		25-GFB478-K1X
C248	266966	CAP. ELEC 0.47 UF 50V +/-10%	ELECTRICAL COMPONENTS	27V513T		25-GFB478-K1X
C248	266966	CAP. ELEC 0.47 UF 50V +/-10%	ELECTRICAL COMPONENTS	24V511T		25-GFB478-K1X
C248	266966	CAP. ELEC 0.47 UF 50V +/-10%	ELECTRICAL COMPONENTS	27F630T		25-GFB478-K1X
C248	266966	CAP. ELEC 0.47 UF 50V +/-10%	ELECTRICAL COMPONENTS	24F512T		25-GFB478-K1X
C248	266966	CAP. ELEC 0.47 UF 50V +/-10%	ELECTRICAL COMPONENTS	27V520T		25-GFB478-K1X
C248	266966	CAP. ELEC 0.47 UF 50V +/-10%	ELECTRICAL COMPONENTS	27V512T		25-GFB478-K1X
C249	266959	CAP. ELEC 4.7 UF 50V +/-20%	ELECTRICAL COMPONENTS	24F512T		25-BFB479-M1X
C249	266959	CAP. ELEC 4.7 UF 50V +/-20%	ELECTRICAL COMPONENTS	27V513T		25-BFB479-M1X
C249	266959	CAP. ELEC 4.7 UF 50V +/-20%	ELECTRICAL COMPONENTS	27V520T		25-BFB479-M1X
C249	266959	CAP. ELEC 4.7 UF 50V +/-20%	ELECTRICAL COMPONENTS	27F630T		25-BFB479-M1X
C249	266959	CAP. ELEC 4.7 UF 50V +/-20%	ELECTRICAL COMPONENTS	24V511T		25-BFB479-M1X
C249	266959	CAP. ELEC 4.7 UF 50V +/-20%	ELECTRICAL COMPONENTS	27F520T		25-BFB479-M1X
C249	266959	CAP. ELEC 4.7 UF 50V +/-20%	ELECTRICAL COMPONENTS	27V512T		25-BFB479-M1X
C250	268302	CAP. ELEC 47 UF 25V +/-20%	ELECTRICAL COMPONENTS	27F630T		25-BDB470-M1X
C250	268302	CAP. ELEC 47 UF 25V +/-20%	ELECTRICAL COMPONENTS	27F520T		25-BDB470-M1X
C250	268302	CAP. ELEC 47 UF 25V +/-20%	ELECTRICAL COMPONENTS	24F512T		25-BDB470-M1X
C250	268302	CAP. ELEC 47 UF 25V +/-20%	ELECTRICAL COMPONENTS	24V511T		25-BDB470-M1X
C250	268302	CAP. ELEC 47 UF 25V +/-20%	ELECTRICAL COMPONENTS	27V512T		25-BDB470-M1X
C250	268302	CAP. ELEC 47 UF 25V +/-20%	ELECTRICAL COMPONENTS	27V520T		25-BDB470-M1X
C250	268302	CAP. ELEC 47 UF 25V +/-20%	ELECTRICAL COMPONENTS	27V513T		25-BDB470-M1X
C251	266959	CAP. ELEC 4.7 UF 50V +/-20%	ELECTRICAL COMPONENTS	27V512T		25-BFB479-M1X
C251	266959	CAP. ELEC 4.7 UF 50V +/-20%	ELECTRICAL COMPONENTS	27V520T		25-BFB479-M1X
C251	266959	CAP. ELEC 4.7 UF 50V +/-20%	ELECTRICAL COMPONENTS	24F512T		25-BFB479-M1X
C251	266959	CAP. ELEC 4.7 UF 50V +/-20%	ELECTRICAL COMPONENTS	27F520T		25-BFB479-M1X
C251	266959	CAP. ELEC 4.7 UF 50V +/-20%	ELECTRICAL COMPONENTS	24V511T		25-BFB479-M1X
C251	266959	CAP. ELEC 4.7 UF 50V +/-20%	ELECTRICAL COMPONENTS	27V513T		25-BFB479-M1X
C251	266959	CAP. ELEC 4.7 UF 50V +/-20%	ELECTRICAL COMPONENTS	27F630T		25-BFB479-M1X
C254	268294	CAP. CER 47PF 50V +/-5% CH	ELECTRICAL COMPONENTS	24V511T		26-EBP470-JCX
C254	268294	CAP. CER 47PF 50V +/-5% CH	ELECTRICAL COMPONENTS	27V520T		26-EBP470-JCX
C254	268294	CAP. CER 47PF 50V +/-5% CH	ELECTRICAL COMPONENTS	27V513T		26-EBP470-JCX
C254	268294	CAP. CER 47PF 50V +/-5% CH	ELECTRICAL COMPONENTS	27V512T		26-EBP470-JCX
C254	268294	CAP. CER 47PF 50V +/-5% CH	ELECTRICAL COMPONENTS	24F512T		26-EBP470-JCX
C254	268294	CAP. CER 47PF 50V +/-5% CH	ELECTRICAL COMPONENTS	27F630T		26-EBP470-JCX
C254	268294	CAP. CER 47PF 50V +/-5% CH	ELECTRICAL COMPONENTS	27F520T		26-EBP470-JCX
C260	266947	CAP. ELEC 47 UF 16V +/-20%	ELECTRICAL COMPONENTS	27V520T		25-BCB470-M1X
C260	266947	CAP. ELEC 47 UF 16V +/-20%	ELECTRICAL COMPONENTS	27V512T		25-BCB470-M1X
C260	266947	CAP. ELEC 47 UF 16V +/-20%	ELECTRICAL COMPONENTS	24F512T		25-BCB470-M1X
C260	266947	CAP. ELEC 47 UF 16V +/-20%	ELECTRICAL COMPONENTS	24V511T		25-BCB470-M1X
C260	266947	CAP. ELEC 47 UF 16V +/-20%	ELECTRICAL COMPONENTS	27F520T		25-BCB470-M1X
C260	266947	CAP. ELEC 47 UF 16V +/-20%	ELECTRICAL COMPONENTS	27V513T		25-BCB470-M1X
C260	266947	CAP. ELEC 47 UF 16V +/-20%	ELECTRICAL COMPONENTS	27F630T		25-BCB470-M1X
C261	266583	CAP. CER 0.01UF 50V +80/-20% F	ELECTRICAL COMPONENTS	24V511T		26-EBP103-ZFX
C261	266583	CAP. CER 0.01UF 50V +80/-20% F	ELECTRICAL COMPONENTS	27F520T		26-EBP103-ZFX
C261	266583	CAP. CER 0.01UF 50V +80/-20% F	ELECTRICAL COMPONENTS	27F630T		26-EBP103-ZFX
C261	266583	CAP. CER 0.01UF 50V +80/-20% F	ELECTRICAL COMPONENTS	27V512T		26-EBP103-ZFX
C261	266583	CAP. CER 0.01UF 50V +80/-20% F	ELECTRICAL COMPONENTS	27V520T		26-EBP103-ZFX
C261	266583	CAP. CER 0.01UF 50V +80/-20% F	ELECTRICAL COMPONENTS	24F512T		26-EBP103-ZFX
C261	266583	CAP. CER 0.01UF 50V +80/-20% F	ELECTRICAL COMPONENTS	27V513T		26-EBP103-ZFX
C262	266946	CAP. ELEC 220 UF 16V +/-20%	ELECTRICAL COMPONENTS	24V511T		25-BCB221-M1X
C262	266946	CAP. ELEC 220 UF 16V +/-20%	ELECTRICAL COMPONENTS	24F512T		25-BCB221-M1X
C262	266946	CAP. ELEC 220 UF 16V +/-20%	ELECTRICAL COMPONENTS	27V520T		25-BCB221-M1X
C262	266946	CAP. ELEC 220 UF 16V +/-20%	ELECTRICAL COMPONENTS	27V513T		25-BCB221-M1X
C262	266946	CAP. ELEC 220 UF 16V +/-20%	ELECTRICAL COMPONENTS	27F630T		25-BCB221-M1X
C262	266946	CAP. ELEC 220 UF 16V +/-20%	ELECTRICAL COMPONENTS	27F520T		25-BCB221-M1X
C262	266946	CAP. ELEC 220 UF 16V +/-20%	ELECTRICAL COMPONENTS	27V512T		25-BCB221-M1X
C263	266598	CAP. ELEC 100 UF 16V +/-20%	ELECTRICAL COMPONENTS	24V511T		25-BCB101-M1X

Symbol	Stock	Description	Circuit	Model	TypeCode	Drawing
C263	266598	CAP. ELEC 100 UF 16V +/-20%	ELECTRICAL COMPONENTS	27F630T		25-BCB101-M1X
C263	266598	CAP. ELEC 100 UF 16V +/-20%	ELECTRICAL COMPONENTS	27V513T		25-BCB101-M1X
C263	266598	CAP. ELEC 100 UF 16V +/-20%	ELECTRICAL COMPONENTS	27V512T		25-BCB101-M1X
C263	266598	CAP. ELEC 100 UF 16V +/-20%	ELECTRICAL COMPONENTS	24F512T		25-BCB101-M1X
C263	266598	CAP. ELEC 100 UF 16V +/-20%	ELECTRICAL COMPONENTS	27F520T		25-BCB101-M1X
C263	266598	CAP. ELEC 100 UF 16V +/-20%	ELECTRICAL COMPONENTS	27V520T		25-BCB101-M1X
C264	266997	CAP. M.P.E 0.1 UF 63V +/-5%	ELECTRICAL COMPONENTS	27V513T		27-MBC104-J0X
C264	266997	CAP. M.P.E 0.1 UF 63V +/-5%	ELECTRICAL COMPONENTS	24V511T		27-MBC104-J0X
C264	266997	CAP. M.P.E 0.1 UF 63V +/-5%	ELECTRICAL COMPONENTS	27F630T		27-MBC104-J0X
C264	266997	CAP. M.P.E 0.1 UF 63V +/-5%	ELECTRICAL COMPONENTS	24F512T		27-MBC104-J0X
C264	266997	CAP. M.P.E 0.1 UF 63V +/-5%	ELECTRICAL COMPONENTS	27F520T		27-MBC104-J0X
C264	266997	CAP. M.P.E 0.1 UF 63V +/-5%	ELECTRICAL COMPONENTS	27V520T		27-MBC104-J0X
C264	266997	CAP. M.P.E 0.1 UF 63V +/-5%	ELECTRICAL COMPONENTS	27V512T		27-MBC104-J0X
C266	266997	CAP. M.P.E 0.1 UF 63V +/-5%	ELECTRICAL COMPONENTS	27F630T		27-MBC104-J0X
C266	266997	CAP. M.P.E 0.1 UF 63V +/-5%	ELECTRICAL COMPONENTS	27F520T		27-MBC104-J0X
C266	266997	CAP. M.P.E 0.1 UF 63V +/-5%	ELECTRICAL COMPONENTS	24F512T		27-MBC104-J0X
C266	266997	CAP. M.P.E 0.1 UF 63V +/-5%	ELECTRICAL COMPONENTS	27V513T		27-MBC104-J0X
C266	266997	CAP. M.P.E 0.1 UF 63V +/-5%	ELECTRICAL COMPONENTS	27V520T		27-MBC104-J0X
C266	266997	CAP. M.P.E 0.1 UF 63V +/-5%	ELECTRICAL COMPONENTS	24V511T		27-MBC104-J0X
C266	266997	CAP. M.P.E 0.1 UF 63V +/-5%	ELECTRICAL COMPONENTS	27V512T		27-MBC104-J0X
C280	266583	CAP. CER 0.01UF 50V +80/-20% F	ELECTRICAL COMPONENTS	24V511T		26-EBP103-ZFX
C280	266583	CAP. CER 0.01UF 50V +80/-20% F	ELECTRICAL COMPONENTS	27V513T		26-EBP103-ZFX
C280	266583	CAP. CER 0.01UF 50V +80/-20% F	ELECTRICAL COMPONENTS	24F512T		26-EBP103-ZFX
C280	266583	CAP. CER 0.01UF 50V +80/-20% F	ELECTRICAL COMPONENTS	27F630T		26-EBP103-ZFX
C280	266583	CAP. CER 0.01UF 50V +80/-20% F	ELECTRICAL COMPONENTS	27V512T		26-EBP103-ZFX
C280	266583	CAP. CER 0.01UF 50V +80/-20% F	ELECTRICAL COMPONENTS	27V520T		26-EBP103-ZFX
C280	266583	CAP. CER 0.01UF 50V +80/-20% F	ELECTRICAL COMPONENTS	27F520T		26-EBP103-ZFX
C281	266583	CAP. CER 0.01UF 50V +80/-20% F	ELECTRICAL COMPONENTS	24F512T		26-EBP103-ZFX
C281	266583	CAP. CER 0.01UF 50V +80/-20% F	ELECTRICAL COMPONENTS	27F520T		26-EBP103-ZFX
C281	266583	CAP. CER 0.01UF 50V +80/-20% F	ELECTRICAL COMPONENTS	27F630T		26-EBP103-ZFX
C281	266583	CAP. CER 0.01UF 50V +80/-20% F	ELECTRICAL COMPONENTS	27V512T		26-EBP103-ZFX
C281	266583	CAP. CER 0.01UF 50V +80/-20% F	ELECTRICAL COMPONENTS	27V520T		26-EBP103-ZFX
C281	266583	CAP. CER 0.01UF 50V +80/-20% F	ELECTRICAL COMPONENTS	27V513T		26-EBP103-ZFX
C281	266583	CAP. CER 0.01UF 50V +80/-20% F	ELECTRICAL COMPONENTS	24V511T		26-EBP103-ZFX
C301	268303	CAP. ELEC 220 UF 35V +/-20%	ELECTRICAL COMPONENTS	27V520T		25-BEA221-M1X
C301	268303	CAP. ELEC 220 UF 35V +/-20%	ELECTRICAL COMPONENTS	24F512T		25-BEA221-M1X
C301	268303	CAP. ELEC 220 UF 35V +/-20%	ELECTRICAL COMPONENTS	27F520T		25-BEA221-M1X
C301	268303	CAP. ELEC 220 UF 35V +/-20%	ELECTRICAL COMPONENTS	27F630T		25-BEA221-M1X
C301	268303	CAP. ELEC 220 UF 35V +/-20%	ELECTRICAL COMPONENTS	27V513T		25-BEA221-M1X
C301	268303	CAP. ELEC 220 UF 35V +/-20%	ELECTRICAL COMPONENTS	27V512T		25-BEA221-M1X
C301	268303	CAP. ELEC 220 UF 35V +/-20%	ELECTRICAL COMPONENTS	24V511T		25-BEA221-M1X
C302	266953	CAP. ELEC 100 UF 35V +/-20%	ELECTRICAL COMPONENTS	24F512T		25-BEB101-M1X
C302	266953	CAP. ELEC 100 UF 35V +/-20%	ELECTRICAL COMPONENTS	27V512T		25-BEB101-M1X
C302	266953	CAP. ELEC 100 UF 35V +/-20%	ELECTRICAL COMPONENTS	24V511T		25-BEB101-M1X
C302	266953	CAP. ELEC 100 UF 35V +/-20%	ELECTRICAL COMPONENTS	27F630T		25-BEB101-M1X
C302	266953	CAP. ELEC 100 UF 35V +/-20%	ELECTRICAL COMPONENTS	27V520T		25-BEB101-M1X
C302	266953	CAP. ELEC 100 UF 35V +/-20%	ELECTRICAL COMPONENTS	27F520T		25-BEB101-M1X
C302	266953	CAP. ELEC 100 UF 35V +/-20%	ELECTRICAL COMPONENTS	27V513T		25-BEB101-M1X
C304	266999	CAP. M.P.E 0.47UF 63V +/-5%	ELECTRICAL COMPONENTS	27V513T		27-MBC474-J0X
C304	266999	CAP. M.P.E 0.47UF 63V +/-5%	ELECTRICAL COMPONENTS	24F512T		27-MBC474-J0X
C304	266999	CAP. M.P.E 0.47UF 63V +/-5%	ELECTRICAL COMPONENTS	27F520T		27-MBC474-J0X
C304	266999	CAP. M.P.E 0.47UF 63V +/-5%	ELECTRICAL COMPONENTS	27V512T		27-MBC474-J0X
C304	266999	CAP. M.P.E 0.47UF 63V +/-5%	ELECTRICAL COMPONENTS	27V520T		27-MBC474-J0X
C304	266999	CAP. M.P.E 0.47UF 63V +/-5%	ELECTRICAL COMPONENTS	27F630T		27-MBC474-J0X
C304	266999	CAP. M.P.E 0.47UF 63V +/-5%	ELECTRICAL COMPONENTS	24V511T		27-MBC474-J0X
C305	268304	CAP. M.P.E 0.68UF 63V +/-5%	ELECTRICAL COMPONENTS	27V512T		27-MBC684-J0X
C305	268304	CAP. M.P.E 0.68UF 63V +/-5%	ELECTRICAL COMPONENTS	27F630T		27-MBC684-J0X
C305	268304	CAP. M.P.E 0.68UF 63V +/-5%	ELECTRICAL COMPONENTS	27F520T		27-MBC684-J0X
C305	268304	CAP. M.P.E 0.68UF 63V +/-5%	ELECTRICAL COMPONENTS	27V513T		27-MBC684-J0X
C305	268304	CAP. M.P.E 0.68UF 63V +/-5%	ELECTRICAL COMPONENTS	24V511T		27-MBC684-J0X

Symbol	Stock	Description	Circuit	Model	TypeCode	Drawing
C305	268304	CAP. M.P.E 0.68UF 63V +/-5%	ELECTRICAL COMPONENTS	24F512T		27-MBC684-J0X
C305	268304	CAP. M.P.E 0.68UF 63V +/-5%	ELECTRICAL COMPONENTS	27V520T		27-MBC684-J0X
C306	268305	CAP. CER 6800PF 50V +/-10% B	ELECTRICAL COMPONENTS	24F512T		26-EBP682-KBX
C306	268305	CAP. CER 6800PF 50V +/-10% B	ELECTRICAL COMPONENTS	27F630T		26-EBP682-KBX
C306	268305	CAP. CER 6800PF 50V +/-10% B	ELECTRICAL COMPONENTS	27V520T		26-EBP682-KBX
C306	268305	CAP. CER 6800PF 50V +/-10% B	ELECTRICAL COMPONENTS	27F520T		26-EBP682-KBX
C306	268305	CAP. CER 6800PF 50V +/-10% B	ELECTRICAL COMPONENTS	27V513T		26-EBP682-KBX
C306	268305	CAP. CER 6800PF 50V +/-10% B	ELECTRICAL COMPONENTS	27V512T		26-EBP682-KBX
C306	268305	CAP. CER 6800PF 50V +/-10% B	ELECTRICAL COMPONENTS	24V511T		26-EBP682-KBX
C308	268303	CAP. ELEC 220 UF 35V +/-20%	ELECTRICAL COMPONENTS	24V511T		25-BEA221-M1X
C308	268303	CAP. ELEC 220 UF 35V +/-20%	ELECTRICAL COMPONENTS	27V512T		25-BEA221-M1X
C308	268303	CAP. ELEC 220 UF 35V +/-20%	ELECTRICAL COMPONENTS	27V520T		25-BEA221-M1X
C308	268303	CAP. ELEC 220 UF 35V +/-20%	ELECTRICAL COMPONENTS	24F512T		25-BEA221-M1X
C308	268303	CAP. ELEC 220 UF 35V +/-20%	ELECTRICAL COMPONENTS	27V513T		25-BEA221-M1X
C308	268303	CAP. ELEC 220 UF 35V +/-20%	ELECTRICAL COMPONENTS	27F520T		25-BEA221-M1X
C308	268303	CAP. ELEC 220 UF 35V +/-20%	ELECTRICAL COMPONENTS	27F630T		25-BEA221-M1X
C309	266997	CAP. M.P.E 0.1 UF 63V +/-5%	ELECTRICAL COMPONENTS	24F512T		27-MBC104-J0X
C309	266997	CAP. M.P.E 0.1 UF 63V +/-5%	ELECTRICAL COMPONENTS	27V520T		27-MBC104-J0X
C309	266997	CAP. M.P.E 0.1 UF 63V +/-5%	ELECTRICAL COMPONENTS	27V512T		27-MBC104-J0X
C309	266997	CAP. M.P.E 0.1 UF 63V +/-5%	ELECTRICAL COMPONENTS	27F520T		27-MBC104-J0X
C309	266997	CAP. M.P.E 0.1 UF 63V +/-5%	ELECTRICAL COMPONENTS	27V513T		27-MBC104-J0X
C309	266997	CAP. M.P.E 0.1 UF 63V +/-5%	ELECTRICAL COMPONENTS	27F630T		27-MBC104-J0X
C309	266997	CAP. M.P.E 0.1 UF 63V +/-5%	ELECTRICAL COMPONENTS	24V511T		27-MBC104-J0X
C311	268306	CAP. M.P.E 1500 PF 100V +/-5%	ELECTRICAL COMPONENTS	27F520T		27-MCC152-J0X
C311	268306	CAP. M.P.E 1500 PF 100V +/-5%	ELECTRICAL COMPONENTS	27F630T		27-MCC152-J0X
C311	268306	CAP. M.P.E 1500 PF 100V +/-5%	ELECTRICAL COMPONENTS	27V513T		27-MCC152-J0X
C311	268306	CAP. M.P.E 1500 PF 100V +/-5%	ELECTRICAL COMPONENTS	27V512T		27-MCC152-J0X
C311	268306	CAP. M.P.E 1500 PF 100V +/-5%	ELECTRICAL COMPONENTS	24F512T		27-MCC152-J0X
C311	268306	CAP. M.P.E 1500 PF 100V +/-5%	ELECTRICAL COMPONENTS	27V520T		27-MCC152-J0X
C311	268306	CAP. M.P.E 1500 PF 100V +/-5%	ELECTRICAL COMPONENTS	24V511T		27-MCC152-J0X
C315	268307	CAP. CER 68 PF 50V +/-5% SL	ELECTRICAL COMPONENTS	24V511T		26-ABC680-JZX
C315	268307	CAP. CER 68 PF 50V +/-5% SL	ELECTRICAL COMPONENTS	27V513T		26-ABC680-JZX
C315	268307	CAP. CER 68 PF 50V +/-5% SL	ELECTRICAL COMPONENTS	27F520T		26-ABC680-JZX
C315	268307	CAP. CER 68 PF 50V +/-5% SL	ELECTRICAL COMPONENTS	27F630T		26-ABC680-JZX
C315	268307	CAP. CER 68 PF 50V +/-5% SL	ELECTRICAL COMPONENTS	24F512T		26-ABC680-JZX
C315	268307	CAP. CER 68 PF 50V +/-5% SL	ELECTRICAL COMPONENTS	27V520T		26-ABC680-JZX
C315	268307	CAP. CER 68 PF 50V +/-5% SL	ELECTRICAL COMPONENTS	27V512T		26-ABC680-JZX
C401	268308	CAP. ELEC 4.7 UF 160V +/-20%	ELECTRICAL COMPONENTS	27V513T		25-BJB479-M1X
C401	268308	CAP. ELEC 4.7 UF 160V +/-20%	ELECTRICAL COMPONENTS	27F520T		25-BJB479-M1X
C401	268308	CAP. ELEC 4.7 UF 160V +/-20%	ELECTRICAL COMPONENTS	24V511T		25-BJB479-M1X
C401	268308	CAP. ELEC 4.7 UF 160V +/-20%	ELECTRICAL COMPONENTS	24F512T		25-BJB479-M1X
C401	268308	CAP. ELEC 4.7 UF 160V +/-20%	ELECTRICAL COMPONENTS	27F630T		25-BJB479-M1X
C401	268308	CAP. ELEC 4.7 UF 160V +/-20%	ELECTRICAL COMPONENTS	27V520T		25-BJB479-M1X
C401	268308	CAP. ELEC 4.7 UF 160V +/-20%	ELECTRICAL COMPONENTS	27V512T		25-BJB479-M1X
C402	268309	CAP. CER 3300PF 50V +/-10%	ELECTRICAL COMPONENTS	27V513T		26-EBP332-KBX
C402	268309	CAP. CER 3300PF 50V +/-10%	ELECTRICAL COMPONENTS	27V520T		26-EBP332-KBX
C402	268309	CAP. CER 3300PF 50V +/-10%	ELECTRICAL COMPONENTS	27V512T		26-EBP332-KBX
C402	268309	CAP. CER 3300PF 50V +/-10%	ELECTRICAL COMPONENTS	24F512T		26-EBP332-KBX
C402	268309	CAP. CER 3300PF 50V +/-10%	ELECTRICAL COMPONENTS	27F520T		26-EBP332-KBX
C402	268309	CAP. CER 3300PF 50V +/-10%	ELECTRICAL COMPONENTS	27F630T		26-EBP332-KBX
C402	268309	CAP. CER 3300PF 50V +/-10%	ELECTRICAL COMPONENTS	24V511T		26-EBP332-KBX
C403	268310	CAP. CER. 390PF 50V +/-5% CH	ELECTRICAL COMPONENTS	24F512T		26-EBP391-JCX
C403	268310	CAP. CER. 390PF 50V +/-5% CH	ELECTRICAL COMPONENTS	27V513T		26-EBP391-JCX
C403	268310	CAP. CER. 390PF 50V +/-5% CH	ELECTRICAL COMPONENTS	24V511T		26-EBP391-JCX
C403	268310	CAP. CER. 390PF 50V +/-5% CH	ELECTRICAL COMPONENTS	27V512T		26-EBP391-JCX
C403	268310	CAP. CER. 390PF 50V +/-5% CH	ELECTRICAL COMPONENTS	27F630T		26-EBP391-JCX
C403	268310	CAP. CER. 390PF 50V +/-5% CH	ELECTRICAL COMPONENTS	27V520T		26-EBP391-JCX
C403	268310	CAP. CER. 390PF 50V +/-5% CH	ELECTRICAL COMPONENTS	27F520T		26-EBP391-JCX
C411	268311	CAP. M.PP 3600 PF 1.6KV +/-5%	ELECTRICAL COMPONENTS	27F630T		27-ALR362-J0X
C411	268311	CAP. M.PP 3600 PF 1.6KV +/-5%	ELECTRICAL COMPONENTS	27V512T		27-ALR362-J0X

Symbol	Stock	Description	Circuit	Model	TypeCode	Drawing
C411	268311	CAP. M.PP 3600 PF 1.6KV +/-5%	ELECTRICAL COMPONENTS	27F520T		27-ALR362-J0X
C411	268311	CAP. M.PP 3600 PF 1.6KV +/-5%	ELECTRICAL COMPONENTS	27V520T		27-ALR362-J0X
C411	268449	CAP. M.PP 3300 PF 1.6KV +/-5%	ELECTRICAL COMPONENTS	24V511T		27-ALR332-J0X
C411	268434	CAP. M.PP 2700 PF 1.6KV +/-5%	ELECTRICAL COMPONENTS	24F512T		27-ALR272-J0X
C411	268311	CAP. M.PP 3600 PF 1.6KV +/-5%	ELECTRICAL COMPONENTS	27V513T		27-ALR362-J0X
C412	268436	CAP. M.PP 8200 PF 1.6KV +/-5%	ELECTRICAL COMPONENTS	24V511T		27-ALR822-J0X
C412	268312	CAP. M.PP 3900 PF 1.6KV +/-5%	ELECTRICAL COMPONENTS	27F630T		27-ALR392-J0X
C412	268424	CAP. M.PP 0.0068UF 1.6KV +/-5%	ELECTRICAL COMPONENTS	27V513T		27-ALR682-J0X
C412	268312	CAP. M.PP 3900 PF 1.6KV +/-5%	ELECTRICAL COMPONENTS	27F520T		27-ALR392-J0X
C412	268424	CAP. M.PP 0.0068UF 1.6KV +/-5%	ELECTRICAL COMPONENTS	27V512T		27-ALR682-J0X
C412	268424	CAP. M.PP 0.0068UF 1.6KV +/-5%	ELECTRICAL COMPONENTS	27V520T		27-ALR682-J0X
C412	268435	CAP. M.PP 4300PF 1.6KV +/-5%	ELECTRICAL COMPONENTS	24F512T		27-ALR432-J0X
C413	268313	CAP. PP 0.022 UF 400V +/-5%	ELECTRICAL COMPONENTS	27F520T		27-RHQ223-J0X
C413	268313	CAP. PP 0.022 UF 400V +/-5%	ELECTRICAL COMPONENTS	27V520T		27-RHQ223-J0X
C413	268313	CAP. PP 0.022 UF 400V +/-5%	ELECTRICAL COMPONENTS	27V512T		27-RHQ223-J0X
C413	268313	CAP. PP 0.022 UF 400V +/-5%	ELECTRICAL COMPONENTS	24V511T		27-RHQ223-J0X
C413	268313	CAP. PP 0.022 UF 400V +/-5%	ELECTRICAL COMPONENTS	24F512T		27-RHQ223-J0X
C413	268313	CAP. PP 0.022 UF 400V +/-5%	ELECTRICAL COMPONENTS	27F630T		27-RHQ223-J0X
C413	268313	CAP. PP 0.022 UF 400V +/-5%	ELECTRICAL COMPONENTS	27V513T		27-RHQ223-J0X
C414	268314	CAP. M.PP 7600 PF 1.6KV +/-5%	ELECTRICAL COMPONENTS	27F520T		27-ALR762-J0X
C414	268450	CAP. M.PP 7200 PF 1.6KV +/-5%	ELECTRICAL COMPONENTS	24V511T		27-ALR722-J0X
C414	268436	CAP. M.PP 8200 PF 1.6KV +/-5%	ELECTRICAL COMPONENTS	24F512T		27-ALR822-J0X
C414	268314	CAP. M.PP 7600 PF 1.6KV +/-5%	ELECTRICAL COMPONENTS	27F630T		27-ALR762-J0X
C414	268314	CAP. M.PP 7600 PF 1.6KV +/-5%	ELECTRICAL COMPONENTS	27V513T		27-ALR762-J0X
C414	268314	CAP. M.PP 7600 PF 1.6KV +/-5%	ELECTRICAL COMPONENTS	27V512T		27-ALR762-J0X
C414	268314	CAP. M.PP 7600 PF 1.6KV +/-5%	ELECTRICAL COMPONENTS	27V520T		27-ALR762-J0X
C415	268315	CAP. ELEC 4.7UF 50V +/-20% NP	ELECTRICAL COMPONENTS	27V513T		25-264610-M1X
C415	268315	CAP. ELEC 4.7UF 50V +/-20% NP	ELECTRICAL COMPONENTS	24F512T		25-264610-M1X
C415	268315	CAP. ELEC 4.7UF 50V +/-20% NP	ELECTRICAL COMPONENTS	27F630T		25-264610-M1X
C415	268315	CAP. ELEC 4.7UF 50V +/-20% NP	ELECTRICAL COMPONENTS	24V511T		25-264610-M1X
C415	268315	CAP. ELEC 4.7UF 50V +/-20% NP	ELECTRICAL COMPONENTS	27F520T		25-264610-M1X
C415	268315	CAP. ELEC 4.7UF 50V +/-20% NP	ELECTRICAL COMPONENTS	27V520T		25-264610-M1X
C415	268315	CAP. ELEC 4.7UF 50V +/-20% NP	ELECTRICAL COMPONENTS	27V512T		25-264610-M1X
C419	268425	CAP.M.PP 0.47UF 400V +/-5%	ELECTRICAL COMPONENTS	24V511T		27-AHR474-JSX
C419	268437	CAP. M.PP 0.39 UF 400V +/-5%	ELECTRICAL COMPONENTS	24F512T		27-AHR394-JSX
C419	268316	CAP. M.PP 0.36UF 400V +/-5%	ELECTRICAL COMPONENTS	27F520T		27-AHR364-JSX
C419	268425	CAP.M.PP 0.47UF 400V +/-5%	ELECTRICAL COMPONENTS	27V520T		27-AHR474-JSX
C419	268425	CAP.M.PP 0.47UF 400V +/-5%	ELECTRICAL COMPONENTS	27V513T		27-AHR474-JSX
C419	268316	CAP. M.PP 0.36UF 400V +/-5%	ELECTRICAL COMPONENTS	27F630T		27-AHR364-JSX
C419	268425	CAP.M.PP 0.47UF 400V +/-5%	ELECTRICAL COMPONENTS	27V512T		27-AHR474-JSX
C422	268438	CAP. ELEC 220 UF 160V +/-20%	ELECTRICAL COMPONENTS	24F512T		25-BJG221-M1X
C422	268317	CAP. ELEC 100 UF 160V +/-20%	ELECTRICAL COMPONENTS	27V512T		25-KJG101-M1X
C422	268317	CAP. ELEC 100 UF 160V +/-20%	ELECTRICAL COMPONENTS	27V520T		25-KJG101-M1X
C422	268317	CAP. ELEC 100 UF 160V +/-20%	ELECTRICAL COMPONENTS	27F520T		25-KJG101-M1X
C422	268317	CAP. ELEC 100 UF 160V +/-20%	ELECTRICAL COMPONENTS	27V513T		25-KJG101-M1X
C422	268317	CAP. ELEC 100 UF 160V +/-20%	ELECTRICAL COMPONENTS	27F630T		25-KJG101-M1X
C422	268317	CAP. ELEC 100 UF 160V +/-20%	ELECTRICAL COMPONENTS	24V511T		25-KJG101-M1X
C431	266987	CAP. CER 220PF 50V +/-5% CH	ELECTRICAL COMPONENTS	27V513T		26-EBP221-JCX
C431	266987	CAP. CER 220PF 50V +/-5% CH	ELECTRICAL COMPONENTS	27F520T		26-EBP221-JCX
C431	266987	CAP. CER 220PF 50V +/-5% CH	ELECTRICAL COMPONENTS	27V512T		26-EBP221-JCX
C431	266987	CAP. CER 220PF 50V +/-5% CH	ELECTRICAL COMPONENTS	24F512T		26-EBP221-JCX
C431	266987	CAP. CER 220PF 50V +/-5% CH	ELECTRICAL COMPONENTS	27F630T		26-EBP221-JCX
C431	266987	CAP. CER 220PF 50V +/-5% CH	ELECTRICAL COMPONENTS	27V520T		26-EBP221-JCX
C431	266987	CAP. CER 220PF 50V +/-5% CH	ELECTRICAL COMPONENTS	24V511T		26-EBP221-JCX
C432	268318	CAP. ELEC 1000 UF 35V +/-20%	ELECTRICAL COMPONENTS	27V512T		25-KEA102-M1X
C432	268318	CAP. ELEC 1000 UF 35V +/-20%	ELECTRICAL COMPONENTS	24V511T		25-KEA102-M1X
C432	268318	CAP. ELEC 1000 UF 35V +/-20%	ELECTRICAL COMPONENTS	27V513T		25-KEA102-M1X
C432	268318	CAP. ELEC 1000 UF 35V +/-20%	ELECTRICAL COMPONENTS	24F512T		25-KEA102-M1X
C432	268318	CAP. ELEC 1000 UF 35V +/-20%	ELECTRICAL COMPONENTS	27F630T		25-KEA102-M1X
C432	268318	CAP. ELEC 1000 UF 35V +/-20%	ELECTRICAL COMPONENTS	27V520T		25-KEA102-M1X

Symbol	Stock	Description	Circuit	Model	TypeCode	Drawing
C432	268318	CAP. ELEC 1000 UF 35V +/-20%	ELECTRICAL COMPONENTS	27F520T		25-KEA102-M1X
C433	268319	CAP. CER 220 PF 500V +/-10% B	ELECTRICAL COMPONENTS	24V511T		26-AIC221-KBX
C433	268319	CAP. CER 220 PF 500V +/-10% B	ELECTRICAL COMPONENTS	27F630T		26-AIC221-KBX
C433	268319	CAP. CER 220 PF 500V +/-10% B	ELECTRICAL COMPONENTS	24F512T		26-AIC221-KBX
C433	268319	CAP. CER 220 PF 500V +/-10% B	ELECTRICAL COMPONENTS	27V512T		26-AIC221-KBX
C433	268319	CAP. CER 220 PF 500V +/-10% B	ELECTRICAL COMPONENTS	27F520T		26-AIC221-KBX
C433	268319	CAP. CER 220 PF 500V +/-10% B	ELECTRICAL COMPONENTS	27V520T		26-AIC221-KBX
C433	268319	CAP. CER 220 PF 500V +/-10% B	ELECTRICAL COMPONENTS	27V513T		26-AIC221-KBX
C435	268318	CAP. ELEC 1000 UF 35V +/-20%	ELECTRICAL COMPONENTS	27F520T		25-KEA102-M1X
C435	268318	CAP. ELEC 1000 UF 35V +/-20%	ELECTRICAL COMPONENTS	24V511T		25-KEA102-M1X
C435	268318	CAP. ELEC 1000 UF 35V +/-20%	ELECTRICAL COMPONENTS	27V520T		25-KEA102-M1X
C435	268318	CAP. ELEC 1000 UF 35V +/-20%	ELECTRICAL COMPONENTS	24F512T		25-KEA102-M1X
C435	268318	CAP. ELEC 1000 UF 35V +/-20%	ELECTRICAL COMPONENTS	27F630T		25-KEA102-M1X
C435	268318	CAP. ELEC 1000 UF 35V +/-20%	ELECTRICAL COMPONENTS	27V513T		25-KEA102-M1X
C435	268318	CAP. ELEC 1000 UF 35V +/-20%	ELECTRICAL COMPONENTS	27V512T		25-KEA102-M1X
C441	268319	CAP. CER 220 PF 500V +/-10% B	ELECTRICAL COMPONENTS	27V520T		26-AIC221-KBX
C441	268319	CAP. CER 220 PF 500V +/-10% B	ELECTRICAL COMPONENTS	27F520T		26-AIC221-KBX
C441	268319	CAP. CER 220 PF 500V +/-10% B	ELECTRICAL COMPONENTS	24V511T		26-AIC221-KBX
C441	268319	CAP. CER 220 PF 500V +/-10% B	ELECTRICAL COMPONENTS	27V512T		26-AIC221-KBX
C441	268319	CAP. CER 220 PF 500V +/-10% B	ELECTRICAL COMPONENTS	27F630T		26-AIC221-KBX
C441	268319	CAP. CER 220 PF 500V +/-10% B	ELECTRICAL COMPONENTS	27V513T		26-AIC221-KBX
C441	268319	CAP. CER 220 PF 500V +/-10% B	ELECTRICAL COMPONENTS	24F512T		26-AIC221-KBX
C442	268320	CAP. ELEC 22UF 250V +/-20%	ELECTRICAL COMPONENTS	27F520T		25-GLA220-M1X
C442	268320	CAP. ELEC 22UF 250V +/-20%	ELECTRICAL COMPONENTS	27V520T		25-GLA220-M1X
C442	268320	CAP. ELEC 22UF 250V +/-20%	ELECTRICAL COMPONENTS	24F512T		25-GLA220-M1X
C442	268320	CAP. ELEC 22UF 250V +/-20%	ELECTRICAL COMPONENTS	27F630T		25-GLA220-M1X
C442	268320	CAP. ELEC 22UF 250V +/-20%	ELECTRICAL COMPONENTS	27V513T		25-GLA220-M1X
C442	268320	CAP. ELEC 22UF 250V +/-20%	ELECTRICAL COMPONENTS	24V511T		25-GLA220-M1X
C442	268320	CAP. ELEC 22UF 250V +/-20%	ELECTRICAL COMPONENTS	27V512T		25-GLA220-M1X
C443	266959	CAP. ELEC 4.7 UF 50V +/-20%	ELECTRICAL COMPONENTS	24F512T		25-BFB479-M1X
C443	266959	CAP. ELEC 4.7 UF 50V +/-20%	ELECTRICAL COMPONENTS	27F630T		25-BFB479-M1X
C443	266959	CAP. ELEC 4.7 UF 50V +/-20%	ELECTRICAL COMPONENTS	27V520T		25-BFB479-M1X
C443	266959	CAP. ELEC 4.7 UF 50V +/-20%	ELECTRICAL COMPONENTS	27V513T		25-BFB479-M1X
C443	266959	CAP. ELEC 4.7 UF 50V +/-20%	ELECTRICAL COMPONENTS	27V512T		25-BFB479-M1X
C443	266959	CAP. ELEC 4.7 UF 50V +/-20%	ELECTRICAL COMPONENTS	27F520T		25-BFB479-M1X
C443	266959	CAP. ELEC 4.7 UF 50V +/-20%	ELECTRICAL COMPONENTS	24V511T		25-BFB479-M1X
C451	268321	CAP. PP 0.056 UF 400V +/-5%	ELECTRICAL COMPONENTS	24V511T		27-RHQ563-J0X
C451	268321	CAP. PP 0.056 UF 400V +/-5%	ELECTRICAL COMPONENTS	27F520T		27-RHQ563-J0X
C451	268321	CAP. PP 0.056 UF 400V +/-5%	ELECTRICAL COMPONENTS	27F630T		27-RHQ563-J0X
C451	268321	CAP. PP 0.056 UF 400V +/-5%	ELECTRICAL COMPONENTS	27V520T		27-RHQ563-J0X
C451	268321	CAP. PP 0.056 UF 400V +/-5%	ELECTRICAL COMPONENTS	27V512T		27-RHQ563-J0X
C451	268321	CAP. PP 0.056 UF 400V +/-5%	ELECTRICAL COMPONENTS	27V513T		27-RHQ563-J0X
C451	268321	CAP. PP 0.056 UF 400V +/-5%	ELECTRICAL COMPONENTS	24F512T		27-RHQ563-J0X
C501	268310	CAP. CER. 390PF 50V +/-5% CH	ELECTRICAL COMPONENTS	24F512T		26-EBP391-JCX
C501	268310	CAP. CER. 390PF 50V +/-5% CH	ELECTRICAL COMPONENTS	27F630T		26-EBP391-JCX
C501	268310	CAP. CER. 390PF 50V +/-5% CH	ELECTRICAL COMPONENTS	24V511T		26-EBP391-JCX
C501	268310	CAP. CER. 390PF 50V +/-5% CH	ELECTRICAL COMPONENTS	27V513T		26-EBP391-JCX
C501	268310	CAP. CER. 390PF 50V +/-5% CH	ELECTRICAL COMPONENTS	27V512T		26-EBP391-JCX
C501	268310	CAP. CER. 390PF 50V +/-5% CH	ELECTRICAL COMPONENTS	27F520T		26-EBP391-JCX
C501	268310	CAP. CER. 390PF 50V +/-5% CH	ELECTRICAL COMPONENTS	27V520T		26-EBP391-JCX
C502	266990	CAP. CER 470PF 50V +/-5% CH	ELECTRICAL COMPONENTS	27F630T		26-EBP471-JCX
C502	266990	CAP. CER 470PF 50V +/-5% CH	ELECTRICAL COMPONENTS	27F520T		26-EBP471-JCX
C502	266990	CAP. CER 470PF 50V +/-5% CH	ELECTRICAL COMPONENTS	24F512T		26-EBP471-JCX
C502	266990	CAP. CER 470PF 50V +/-5% CH	ELECTRICAL COMPONENTS	27V520T		26-EBP471-JCX
C502	266990	CAP. CER 470PF 50V +/-5% CH	ELECTRICAL COMPONENTS	27V512T		26-EBP471-JCX
C502	266990	CAP. CER 470PF 50V +/-5% CH	ELECTRICAL COMPONENTS	24V511T		26-EBP471-JCX
C502	266990	CAP. CER 470PF 50V +/-5% CH	ELECTRICAL COMPONENTS	27V513T		26-EBP471-JCX
C503	266990	CAP. CER 470PF 50V +/-5% CH	ELECTRICAL COMPONENTS	27F520T		26-EBP471-JCX
C503	266990	CAP. CER 470PF 50V +/-5% CH	ELECTRICAL COMPONENTS	24V511T		26-EBP471-JCX
C503	266990	CAP. CER 470PF 50V +/-5% CH	ELECTRICAL COMPONENTS	27V512T		26-EBP471-JCX

Symbol	Stock	Description	Circuit	Model	TypeCode	Drawing
C503	266990	CAP. CER 470PF 50V +/-5% CH	ELECTRICAL COMPONENTS	27F630T		26-EBP471-JCX
C503	266990	CAP. CER 470PF 50V +/-5% CH	ELECTRICAL COMPONENTS	27V520T		26-EBP471-JCX
C503	266990	CAP. CER 470PF 50V +/-5% CH	ELECTRICAL COMPONENTS	24F512T		26-EBP471-JCX
C503	266990	CAP. CER 470PF 50V +/-5% CH	ELECTRICAL COMPONENTS	27V513T		26-EBP471-JCX
C504	266964	CAP. ELEC 10 UF 250V +/-20%	ELECTRICAL COMPONENTS	27V520T		25-BLA100-M1X
C504	266964	CAP. ELEC 10 UF 250V +/-20%	ELECTRICAL COMPONENTS	24F512T		25-BLA100-M1X
C504	266964	CAP. ELEC 10 UF 250V +/-20%	ELECTRICAL COMPONENTS	27F630T		25-BLA100-M1X
C504	266964	CAP. ELEC 10 UF 250V +/-20%	ELECTRICAL COMPONENTS	24V511T		25-BLA100-M1X
C504	266964	CAP. ELEC 10 UF 250V +/-20%	ELECTRICAL COMPONENTS	27V512T		25-BLA100-M1X
C504	266964	CAP. ELEC 10 UF 250V +/-20%	ELECTRICAL COMPONENTS	27V513T		25-BLA100-M1X
C504	266964	CAP. ELEC 10 UF 250V +/-20%	ELECTRICAL COMPONENTS	27F520T		25-BLA100-M1X
C505	268322	CAP. CER 1000 PF 2KV +/-10% R	ELECTRICAL COMPONENTS	27F520T		26-AMK102-KRX
C505	268322	CAP. CER 1000 PF 2KV +/-10% R	ELECTRICAL COMPONENTS	27V520T		26-AMK102-KRX
C505	268322	CAP. CER 1000 PF 2KV +/-10% R	ELECTRICAL COMPONENTS	27V513T		26-AMK102-KRX
C505	268322	CAP. CER 1000 PF 2KV +/-10% R	ELECTRICAL COMPONENTS	24F512T		26-AMK102-KRX
C505	268322	CAP. CER 1000 PF 2KV +/-10% R	ELECTRICAL COMPONENTS	24V511T		26-AMK102-KRX
C505	268322	CAP. CER 1000 PF 2KV +/-10% R	ELECTRICAL COMPONENTS	27F630T		26-AMK102-KRX
C505	268322	CAP. CER 1000 PF 2KV +/-10% R	ELECTRICAL COMPONENTS	27V512T		26-AMK102-KRX
C506	268323	CAP. ELEC 470 UF 16V +/-20%	ELECTRICAL COMPONENTS	27F520T		25-BCB471-M1X
C506	268323	CAP. ELEC 470 UF 16V +/-20%	ELECTRICAL COMPONENTS	27F630T		25-BCB471-M1X
C506	268323	CAP. ELEC 470 UF 16V +/-20%	ELECTRICAL COMPONENTS	27V513T		25-BCB471-M1X
C506	268323	CAP. ELEC 470 UF 16V +/-20%	ELECTRICAL COMPONENTS	24V511T		25-BCB471-M1X
C506	268323	CAP. ELEC 470 UF 16V +/-20%	ELECTRICAL COMPONENTS	27V520T		25-BCB471-M1X
C506	268323	CAP. ELEC 470 UF 16V +/-20%	ELECTRICAL COMPONENTS	24F512T		25-BCB471-M1X
C506	268323	CAP. ELEC 470 UF 16V +/-20%	ELECTRICAL COMPONENTS	27V512T		25-BCB471-M1X
C508	266583	CAP. CER 0.01UF 50V +80/-20% F	ELECTRICAL COMPONENTS	27V512T		26-EBP103-ZFX
C508	266583	CAP. CER 0.01UF 50V +80/-20% F	ELECTRICAL COMPONENTS	24F512T		26-EBP103-ZFX
C508	266583	CAP. CER 0.01UF 50V +80/-20% F	ELECTRICAL COMPONENTS	27F520T		26-EBP103-ZFX
C508	266583	CAP. CER 0.01UF 50V +80/-20% F	ELECTRICAL COMPONENTS	24V511T		26-EBP103-ZFX
C508	266583	CAP. CER 0.01UF 50V +80/-20% F	ELECTRICAL COMPONENTS	27V513T		26-EBP103-ZFX
C508	266583	CAP. CER 0.01UF 50V +80/-20% F	ELECTRICAL COMPONENTS	27V520T		26-EBP103-ZFX
C508	266583	CAP. CER 0.01UF 50V +80/-20% F	ELECTRICAL COMPONENTS	27F630T		26-EBP103-ZFX
C509	266583	CAP. CER 0.01UF 50V +80/-20% F	ELECTRICAL COMPONENTS	24F512T		26-EBP103-ZFX
C509	266583	CAP. CER 0.01UF 50V +80/-20% F	ELECTRICAL COMPONENTS	27V512T		26-EBP103-ZFX
C509	266583	CAP. CER 0.01UF 50V +80/-20% F	ELECTRICAL COMPONENTS	27V520T		26-EBP103-ZFX
C509	266583	CAP. CER 0.01UF 50V +80/-20% F	ELECTRICAL COMPONENTS	27V513T		26-EBP103-ZFX
C509	266583	CAP. CER 0.01UF 50V +80/-20% F	ELECTRICAL COMPONENTS	27F520T		26-EBP103-ZFX
C509	266583	CAP. CER 0.01UF 50V +80/-20% F	ELECTRICAL COMPONENTS	27F630T		26-EBP103-ZFX
C509	266583	CAP. CER 0.01UF 50V +80/-20% F	ELECTRICAL COMPONENTS	24V511T		26-EBP103-ZFX
C624	266949	CAP. ELEC 470 UF 25V +/-20%	ELECTRICAL COMPONENTS	27V512T		25-BDA471-M1X
C624	266949	CAP. ELEC 470 UF 25V +/-20%	ELECTRICAL COMPONENTS	24F512T		25-BDA471-M1X
C624	266949	CAP. ELEC 470 UF 25V +/-20%	ELECTRICAL COMPONENTS	27F630T		25-BDA471-M1X
C624	266949	CAP. ELEC 470 UF 25V +/-20%	ELECTRICAL COMPONENTS	24V511T		25-BDA471-M1X
C624	266949	CAP. ELEC 470 UF 25V +/-20%	ELECTRICAL COMPONENTS	27F520T		25-BDA471-M1X
C624	266949	CAP. ELEC 470 UF 25V +/-20%	ELECTRICAL COMPONENTS	27V513T		25-BDA471-M1X
C624	266949	CAP. ELEC 470 UF 25V +/-20%	ELECTRICAL COMPONENTS	27V520T		25-BDA471-M1X
C625	266997	CAP. M.P.E 0.1 UF 63V +/-5%	ELECTRICAL COMPONENTS	27V513T		27-MBC104-J0X
C625	266997	CAP. M.P.E 0.1 UF 63V +/-5%	ELECTRICAL COMPONENTS	24F512T		27-MBC104-J0X
C625	266997	CAP. M.P.E 0.1 UF 63V +/-5%	ELECTRICAL COMPONENTS	27F520T		27-MBC104-J0X
C625	266997	CAP. M.P.E 0.1 UF 63V +/-5%	ELECTRICAL COMPONENTS	24V511T		27-MBC104-J0X
C625	266997	CAP. M.P.E 0.1 UF 63V +/-5%	ELECTRICAL COMPONENTS	27V512T		27-MBC104-J0X
C625	266997	CAP. M.P.E 0.1 UF 63V +/-5%	ELECTRICAL COMPONENTS	27F630T		27-MBC104-J0X
C625	266997	CAP. M.P.E 0.1 UF 63V +/-5%	ELECTRICAL COMPONENTS	27V520T		27-MBC104-J0X
C626	268324	CAP. P.E 0.0033UF 63V +/-5%	ELECTRICAL COMPONENTS	27V513T		27-PBC332-J0X
C626	268324	CAP. P.E 0.0033UF 63V +/-5%	ELECTRICAL COMPONENTS	27V512T		27-PBC332-J0X
C626	268324	CAP. P.E 0.0033UF 63V +/-5%	ELECTRICAL COMPONENTS	24F512T		27-PBC332-J0X
C626	268324	CAP. P.E 0.0033UF 63V +/-5%	ELECTRICAL COMPONENTS	24V511T		27-PBC332-J0X
C626	268324	CAP. P.E 0.0033UF 63V +/-5%	ELECTRICAL COMPONENTS	27V520T		27-PBC332-J0X
C626	268324	CAP. P.E 0.0033UF 63V +/-5%	ELECTRICAL COMPONENTS	27F520T		27-PBC332-J0X
C626	268324	CAP. P.E 0.0033UF 63V +/-5%	ELECTRICAL COMPONENTS	27F630T		27-PBC332-J0X

Symbol	Stock	Description	Circuit	Model	TypeCode	Drawing
C627	266998	CAP. M.P.E 0.22UF 63V +/-5%	ELECTRICAL COMPONENTS	27F630T		27-MBC224-J0X
C627	266998	CAP. M.P.E 0.22UF 63V +/-5%	ELECTRICAL COMPONENTS	27V520T		27-MBC224-J0X
C627	266998	CAP. M.P.E 0.22UF 63V +/-5%	ELECTRICAL COMPONENTS	27V513T		27-MBC224-J0X
C627	266998	CAP. M.P.E 0.22UF 63V +/-5%	ELECTRICAL COMPONENTS	24V511T		27-MBC224-J0X
C627	266998	CAP. M.P.E 0.22UF 63V +/-5%	ELECTRICAL COMPONENTS	27V512T		27-MBC224-J0X
C627	266998	CAP. M.P.E 0.22UF 63V +/-5%	ELECTRICAL COMPONENTS	27F520T		27-MBC224-J0X
C627	266998	CAP. M.P.E 0.22UF 63V +/-5%	ELECTRICAL COMPONENTS	24F512T		27-MBC224-J0X
C630	268324	CAP. P.E 0.0033UF 63V +/-5%	ELECTRICAL COMPONENTS	27F630T		27-PBC332-J0X
C630	268324	CAP. P.E 0.0033UF 63V +/-5%	ELECTRICAL COMPONENTS	27V512T		27-PBC332-J0X
C630	268324	CAP. P.E 0.0033UF 63V +/-5%	ELECTRICAL COMPONENTS	27V513T		27-PBC332-J0X
C630	268324	CAP. P.E 0.0033UF 63V +/-5%	ELECTRICAL COMPONENTS	27V520T		27-PBC332-J0X
C630	268324	CAP. P.E 0.0033UF 63V +/-5%	ELECTRICAL COMPONENTS	24V511T		27-PBC332-J0X
C630	268324	CAP. P.E 0.0033UF 63V +/-5%	ELECTRICAL COMPONENTS	27F520T		27-PBC332-J0X
C630	268324	CAP. P.E 0.0033UF 63V +/-5%	ELECTRICAL COMPONENTS	24F512T		27-PBC332-J0X
C631	266998	CAP. M.P.E 0.22UF 63V +/-5%	ELECTRICAL COMPONENTS	24V511T		27-MBC224-J0X
C631	266998	CAP. M.P.E 0.22UF 63V +/-5%	ELECTRICAL COMPONENTS	27V520T		27-MBC224-J0X
C631	266998	CAP. M.P.E 0.22UF 63V +/-5%	ELECTRICAL COMPONENTS	27F520T		27-MBC224-J0X
C631	266998	CAP. M.P.E 0.22UF 63V +/-5%	ELECTRICAL COMPONENTS	27V512T		27-MBC224-J0X
C631	266998	CAP. M.P.E 0.22UF 63V +/-5%	ELECTRICAL COMPONENTS	24F512T		27-MBC224-J0X
C631	266998	CAP. M.P.E 0.22UF 63V +/-5%	ELECTRICAL COMPONENTS	27F630T		27-MBC224-J0X
C631	266998	CAP. M.P.E 0.22UF 63V +/-5%	ELECTRICAL COMPONENTS	27V513T		27-MBC224-J0X
C634	268325	CAP. ELEC 33UF 50V +/-20%	ELECTRICAL COMPONENTS	24V511T		25-BFB330-M1X
C634	268325	CAP. ELEC 33UF 50V +/-20%	ELECTRICAL COMPONENTS	27V520T		25-BFB330-M1X
C634	268325	CAP. ELEC 33UF 50V +/-20%	ELECTRICAL COMPONENTS	27F520T		25-BFB330-M1X
C634	268325	CAP. ELEC 33UF 50V +/-20%	ELECTRICAL COMPONENTS	27V513T		25-BFB330-M1X
C634	268325	CAP. ELEC 33UF 50V +/-20%	ELECTRICAL COMPONENTS	27V512T		25-BFB330-M1X
C634	268325	CAP. ELEC 33UF 50V +/-20%	ELECTRICAL COMPONENTS	27F630T		25-BFB330-M1X
C634	268325	CAP. ELEC 33UF 50V +/-20%	ELECTRICAL COMPONENTS	24F512T		25-BFB330-M1X
C661	268300	CAP. ELEC 100 UF 25V +/-20%	ELECTRICAL COMPONENTS	27V513T		25-BDB101-M1X
C661	268300	CAP. ELEC 100 UF 25V +/-20%	ELECTRICAL COMPONENTS	27F630T		25-BDB101-M1X
C661	268300	CAP. ELEC 100 UF 25V +/-20%	ELECTRICAL COMPONENTS	27V520T		25-BDB101-M1X
C661	268300	CAP. ELEC 100 UF 25V +/-20%	ELECTRICAL COMPONENTS	24F512T		25-BDB101-M1X
C661	268300	CAP. ELEC 100 UF 25V +/-20%	ELECTRICAL COMPONENTS	24V511T		25-BDB101-M1X
C661	268300	CAP. ELEC 100 UF 25V +/-20%	ELECTRICAL COMPONENTS	27F520T		25-BDB101-M1X
C661	268300	CAP. ELEC 100 UF 25V +/-20%	ELECTRICAL COMPONENTS	27V512T		25-BDB101-M1X
C801	268326	CAP. M.PP 0.22 UF 275VAC 20%	ELECTRICAL COMPONENTS	27F630T	S	27-AQT224-MVH
C801	268326	CAP. M.PP 0.22 UF 275VAC 20%	ELECTRICAL COMPONENTS	27V512T	S	27-AQT224-MVH
C801	268326	CAP. M.PP 0.22 UF 275VAC 20%	ELECTRICAL COMPONENTS	27V513T	S	27-AQT224-MVH
C801	268326	CAP. M.PP 0.22 UF 275VAC 20%	ELECTRICAL COMPONENTS	24V511T		27-AQT224-MVH
C801	268326	CAP. M.PP 0.22 UF 275VAC 20%	ELECTRICAL COMPONENTS	27F520T	S	27-AQT224-MVH
C801	268326	CAP. M.PP 0.22 UF 275VAC 20%	ELECTRICAL COMPONENTS	27V520T	S	27-AQT224-MVH
C801	268326	CAP. M.PP 0.22 UF 275VAC 20%	ELECTRICAL COMPONENTS	24F512T	S	27-AQT224-MVH
C802	268326	CAP. M.PP 0.22 UF 275VAC 20%	ELECTRICAL COMPONENTS	27V512T	S	27-AQT224-MVH
C802	268326	CAP. M.PP 0.22 UF 275VAC 20%	ELECTRICAL COMPONENTS	24V511T		27-AQT224-MVH
C802	268326	CAP. M.PP 0.22 UF 275VAC 20%	ELECTRICAL COMPONENTS	27F630T	S	27-AQT224-MVH
C802	268326	CAP. M.PP 0.22 UF 275VAC 20%	ELECTRICAL COMPONENTS	27V520T	S	27-AQT224-MVH
C802	268326	CAP. M.PP 0.22 UF 275VAC 20%	ELECTRICAL COMPONENTS	27F520T	S	27-AQT224-MVH
C802	268326	CAP. M.PP 0.22 UF 275VAC 20%	ELECTRICAL COMPONENTS	27V513T	S	27-AQT224-MVH
C802	268326	CAP. M.PP 0.22 UF 275VAC 20%	ELECTRICAL COMPONENTS	24F512T	S	27-AQT224-MVH
C803	268327	CAP. M.PE 0.1 UF 400V +/-10%	ELECTRICAL COMPONENTS	24V511T		27-MHW104-K0X
C803	268327	CAP. M.PE 0.1 UF 400V +/-10%	ELECTRICAL COMPONENTS	27V520T		27-MHW104-K0X
C803	268327	CAP. M.PE 0.1 UF 400V +/-10%	ELECTRICAL COMPONENTS	27F520T		27-MHW104-K0X
C803	268327	CAP. M.PE 0.1 UF 400V +/-10%	ELECTRICAL COMPONENTS	27V512T		27-MHW104-K0X
C803	268327	CAP. M.PE 0.1 UF 400V +/-10%	ELECTRICAL COMPONENTS	27V513T		27-MHW104-K0X
C803	268327	CAP. M.PE 0.1 UF 400V +/-10%	ELECTRICAL COMPONENTS	24F512T		27-MHW104-K0X
C803	268327	CAP. M.PE 0.1 UF 400V +/-10%	ELECTRICAL COMPONENTS	27F630T		27-MHW104-K0X
C804	266984	CAP. CER 4700PF 250VAC+80-20%F	ELECTRICAL COMPONENTS	24F512T		26-AQK472-ZFX
C804	266984	CAP. CER 4700PF 250VAC+80-20%F	ELECTRICAL COMPONENTS	27V512T		26-AQK472-ZFX
C804	266984	CAP. CER 4700PF 250VAC+80-20%F	ELECTRICAL COMPONENTS	24V511T		26-AQK472-ZFX
C804	266984	CAP. CER 4700PF 250VAC+80-20%F	ELECTRICAL COMPONENTS	27V513T		26-AQK472-ZFX

Symbol	Stock	Description	Circuit	Model	TypeCode	Drawing
C804	266984	CAP. CER 4700PF 250VAC+80-20%F	ELECTRICAL COMPONENTS	27V520T		26-AQK472-ZFX
C804	266984	CAP. CER 4700PF 250VAC+80-20%F	ELECTRICAL COMPONENTS	27F520T		26-AQK472-ZFX
C804	266984	CAP. CER 4700PF 250VAC+80-20%F	ELECTRICAL COMPONENTS	27F630T		26-AQK472-ZFX
C804A	266983	CAP. CER 470PF 400VAC +/-10% B	ELECTRICAL COMPONENTS	24V511T		26-APK471-KBX
C804A	266983	CAP. CER 470PF 400VAC +/-10% B	ELECTRICAL COMPONENTS	24F512T	S	26-APK471-KBX
C804A	266983	CAP. CER 470PF 400VAC +/-10% B	ELECTRICAL COMPONENTS	27V512T	S	26-APK471-KBX
C804A	266983	CAP. CER 470PF 400VAC +/-10% B	ELECTRICAL COMPONENTS	27F520T	S	26-APK471-KBX
C804A	266983	CAP. CER 470PF 400VAC +/-10% B	ELECTRICAL COMPONENTS	27F630T	S	26-APK471-KBX
C804A	266983	CAP. CER 470PF 400VAC +/-10% B	ELECTRICAL COMPONENTS	27V520T	S	26-APK471-KBX
C804A	266983	CAP. CER 470PF 400VAC +/-10% B	ELECTRICAL COMPONENTS	27V513T	S	26-APK471-KBX
C805	266984	CAP. CER 4700PF 250VAC+80-20%F	ELECTRICAL COMPONENTS	27V520T		26-AQK472-ZFX
C805	266984	CAP. CER 4700PF 250VAC+80-20%F	ELECTRICAL COMPONENTS	27F520T		26-AQK472-ZFX
C805	266984	CAP. CER 4700PF 250VAC+80-20%F	ELECTRICAL COMPONENTS	27V512T		26-AQK472-ZFX
C805	266984	CAP. CER 4700PF 250VAC+80-20%F	ELECTRICAL COMPONENTS	24V511T		26-AQK472-ZFX
C805	266984	CAP. CER 4700PF 250VAC+80-20%F	ELECTRICAL COMPONENTS	27F630T		26-AQK472-ZFX
C805	266984	CAP. CER 4700PF 250VAC+80-20%F	ELECTRICAL COMPONENTS	24F512T		26-AQK472-ZFX
C805	266984	CAP. CER 4700PF 250VAC+80-20%F	ELECTRICAL COMPONENTS	27V513T		26-AQK472-ZFX
C805A	266983	CAP. CER 470PF 400VAC +/-10% B	ELECTRICAL COMPONENTS	24V511T		26-APK471-KBX
C805A	266983	CAP. CER 470PF 400VAC +/-10% B	ELECTRICAL COMPONENTS	27V520T	S	26-APK471-KBX
C805A	266983	CAP. CER 470PF 400VAC +/-10% B	ELECTRICAL COMPONENTS	27V513T	S	26-APK471-KBX
C805A	266983	CAP. CER 470PF 400VAC +/-10% B	ELECTRICAL COMPONENTS	27V512T	S	26-APK471-KBX
C805A	266983	CAP. CER 470PF 400VAC +/-10% B	ELECTRICAL COMPONENTS	27F520T	S	26-APK471-KBX
C805A	266983	CAP. CER 470PF 400VAC +/-10% B	ELECTRICAL COMPONENTS	24F512T	S	26-APK471-KBX
C805A	266983	CAP. CER 470PF 400VAC +/-10% B	ELECTRICAL COMPONENTS	27F630T	S	26-APK471-KBX
C806	268328	CAP. ELEC 680UF 200V +/-20% (3	ELECTRICAL COMPONENTS	27F630T		25-BKJ681-M1X
C806	268328	CAP. ELEC 680UF 200V +/-20% (3	ELECTRICAL COMPONENTS	24F512T		25-BKJ681-M1X
C806	268328	CAP. ELEC 680UF 200V +/-20% (3	ELECTRICAL COMPONENTS	27V513T		25-BKJ681-M1X
C806	268328	CAP. ELEC 680UF 200V +/-20% (3	ELECTRICAL COMPONENTS	27F520T		25-BKJ681-M1X
C806	268328	CAP. ELEC 680UF 200V +/-20% (3	ELECTRICAL COMPONENTS	27V520T		25-BKJ681-M1X
C806	268328	CAP. ELEC 680UF 200V +/-20% (3	ELECTRICAL COMPONENTS	24V511T		25-BKJ681-M1X
C806	268328	CAP. ELEC 680UF 200V +/-20% (3	ELECTRICAL COMPONENTS	27V512T		25-BKJ681-M1X
C807	266977	CAP. CER 0.01UF 500V +/-10% B	ELECTRICAL COMPONENTS	24F512T		26-AIM103-KBX
C807	266977	CAP. CER 0.01UF 500V +/-10% B	ELECTRICAL COMPONENTS	27V513T		26-AIM103-KBX
C807	266977	CAP. CER 0.01UF 500V +/-10% B	ELECTRICAL COMPONENTS	27V512T		26-AIM103-KBX
C807	266977	CAP. CER 0.01UF 500V +/-10% B	ELECTRICAL COMPONENTS	27V520T		26-AIM103-KBX
C807	266977	CAP. CER 0.01UF 500V +/-10% B	ELECTRICAL COMPONENTS	24V511T		26-AIM103-KBX
C807	266977	CAP. CER 0.01UF 500V +/-10% B	ELECTRICAL COMPONENTS	27F630T		26-AIM103-KBX
C807	266977	CAP. CER 0.01UF 500V +/-10% B	ELECTRICAL COMPONENTS	27F520T		26-AIM103-KBX
C810	266987	CAP. CER 220PF 50V +/-5% CH	ELECTRICAL COMPONENTS	27F520T		26-EBP221-JCX
C810	266987	CAP. CER 220PF 50V +/-5% CH	ELECTRICAL COMPONENTS	24F512T		26-EBP221-JCX
C810	266987	CAP. CER 220PF 50V +/-5% CH	ELECTRICAL COMPONENTS	27V513T		26-EBP221-JCX
C810	266987	CAP. CER 220PF 50V +/-5% CH	ELECTRICAL COMPONENTS	27V520T		26-EBP221-JCX
C810	266987	CAP. CER 220PF 50V +/-5% CH	ELECTRICAL COMPONENTS	27V512T		26-EBP221-JCX
C810	266987	CAP. CER 220PF 50V +/-5% CH	ELECTRICAL COMPONENTS	27F630T		26-EBP221-JCX
C810	266987	CAP. CER 220PF 50V +/-5% CH	ELECTRICAL COMPONENTS	24V511T		26-EBP221-JCX
C811	266957	CAP. ELEC 3.3 UF 50V +/-20%	ELECTRICAL COMPONENTS	27V513T		25-BFB339-M1X
C811	266957	CAP. ELEC 3.3 UF 50V +/-20%	ELECTRICAL COMPONENTS	27V520T		25-BFB339-M1X
C811	266957	CAP. ELEC 3.3 UF 50V +/-20%	ELECTRICAL COMPONENTS	24F512T		25-BFB339-M1X
C811	266957	CAP. ELEC 3.3 UF 50V +/-20%	ELECTRICAL COMPONENTS	27V512T		25-BFB339-M1X
C811	266957	CAP. ELEC 3.3 UF 50V +/-20%	ELECTRICAL COMPONENTS	24V511T		25-BFB339-M1X
C811	266957	CAP. ELEC 3.3 UF 50V +/-20%	ELECTRICAL COMPONENTS	27F630T		25-BFB339-M1X
C811	266957	CAP. ELEC 3.3 UF 50V +/-20%	ELECTRICAL COMPONENTS	27F520T		25-BFB339-M1X
C812	266582	CAP. CER 1000 PF 50V +/-10% B	ELECTRICAL COMPONENTS	27V520T		26-EBP102-KBX
C812	266582	CAP. CER 1000 PF 50V +/-10% B	ELECTRICAL COMPONENTS	27F630T		26-EBP102-KBX
C812	266582	CAP. CER 1000 PF 50V +/-10% B	ELECTRICAL COMPONENTS	27V512T		26-EBP102-KBX
C812	266582	CAP. CER 1000 PF 50V +/-10% B	ELECTRICAL COMPONENTS	24F512T		26-EBP102-KBX
C812	266582	CAP. CER 1000 PF 50V +/-10% B	ELECTRICAL COMPONENTS	27F520T		26-EBP102-KBX
C812	266582	CAP. CER 1000 PF 50V +/-10% B	ELECTRICAL COMPONENTS	27V513T		26-EBP102-KBX
C812	266582	CAP. CER 1000 PF 50V +/-10% B	ELECTRICAL COMPONENTS	24V511T		26-EBP102-KBX
C813	266969	CAP. CER 0.1 UF 50V +80-20% F	ELECTRICAL COMPONENTS	27F520T		26-ABC104-ZFX

Symbol	Stock	Description	Circuit	Model	TypeCode	Drawing
C813	266969	CAP. CER 0.1 UF 50V +80-20% F	ELECTRICAL COMPONENTS	27V512T		26-ABC104-ZFX
C813	266969	CAP. CER 0.1 UF 50V +80-20% F	ELECTRICAL COMPONENTS	27V520T		26-ABC104-ZFX
C813	266969	CAP. CER 0.1 UF 50V +80-20% F	ELECTRICAL COMPONENTS	27F630T		26-ABC104-ZFX
C813	266969	CAP. CER 0.1 UF 50V +80-20% F	ELECTRICAL COMPONENTS	27V513T		26-ABC104-ZFX
C813	266969	CAP. CER 0.1 UF 50V +80-20% F	ELECTRICAL COMPONENTS	24V511T		26-ABC104-ZFX
C813	266969	CAP. CER 0.1 UF 50V +80-20% F	ELECTRICAL COMPONENTS	24F512T		26-ABC104-ZFX
C814	268329	CAP. ELEC 10 UF 35V +/-20%	ELECTRICAL COMPONENTS	27V513T		25-BEB100-M1X
C814	268329	CAP. ELEC 10 UF 35V +/-20%	ELECTRICAL COMPONENTS	24V511T		25-BEB100-M1X
C814	268329	CAP. ELEC 10 UF 35V +/-20%	ELECTRICAL COMPONENTS	27F630T		25-BEB100-M1X
C814	268329	CAP. ELEC 10 UF 35V +/-20%	ELECTRICAL COMPONENTS	24F512T		25-BEB100-M1X
C814	268329	CAP. ELEC 10 UF 35V +/-20%	ELECTRICAL COMPONENTS	27V512T		25-BEB100-M1X
C814	268329	CAP. ELEC 10 UF 35V +/-20%	ELECTRICAL COMPONENTS	27F520T		25-BEB100-M1X
C814	268329	CAP. ELEC 10 UF 35V +/-20%	ELECTRICAL COMPONENTS	27V520T		25-BEB100-M1X
C815	268330	CAP. CER 1500 PF 2KV +/-10% B	ELECTRICAL COMPONENTS	27F520T		26-AMK152-KBX
C815	268330	CAP. CER 1500 PF 2KV +/-10% B	ELECTRICAL COMPONENTS	24F512T		26-AMK152-KBX
C815	268330	CAP. CER 1500 PF 2KV +/-10% B	ELECTRICAL COMPONENTS	27V520T		26-AMK152-KBX
C815	268330	CAP. CER 1500 PF 2KV +/-10% B	ELECTRICAL COMPONENTS	27F630T		26-AMK152-KBX
C815	268330	CAP. CER 1500 PF 2KV +/-10% B	ELECTRICAL COMPONENTS	24V511T		26-AMK152-KBX
C815	268330	CAP. CER 1500 PF 2KV +/-10% B	ELECTRICAL COMPONENTS	27V513T		26-AMK152-KBX
C815	268330	CAP. CER 1500 PF 2KV +/-10% B	ELECTRICAL COMPONENTS	27V512T		26-AMK152-KBX
C820	268319	CAP. CER 220 PF 500V +/-10% B	ELECTRICAL COMPONENTS	27F630T		26-AIC221-KBX
C820	268319	CAP. CER 220 PF 500V +/-10% B	ELECTRICAL COMPONENTS	27F520T		26-AIC221-KBX
C820	268319	CAP. CER 220 PF 500V +/-10% B	ELECTRICAL COMPONENTS	27V512T		26-AIC221-KBX
C820	268319	CAP. CER 220 PF 500V +/-10% B	ELECTRICAL COMPONENTS	24V511T		26-AIC221-KBX
C820	268319	CAP. CER 220 PF 500V +/-10% B	ELECTRICAL COMPONENTS	27V520T		26-AIC221-KBX
C820	268319	CAP. CER 220 PF 500V +/-10% B	ELECTRICAL COMPONENTS	24F512T		26-AIC221-KBX
C820	268319	CAP. CER 220 PF 500V +/-10% B	ELECTRICAL COMPONENTS	27V513T		26-AIC221-KBX
C821	266948	CAP. ELEC 1000 UF 25V +/-20%	ELECTRICAL COMPONENTS	27F520T		25-BDA102-M1X
C821	266948	CAP. ELEC 1000 UF 25V +/-20%	ELECTRICAL COMPONENTS	24F512T		25-BDA102-M1X
C821	266948	CAP. ELEC 1000 UF 25V +/-20%	ELECTRICAL COMPONENTS	27V513T		25-BDA102-M1X
C821	266948	CAP. ELEC 1000 UF 25V +/-20%	ELECTRICAL COMPONENTS	24V511T		25-BDA102-M1X
C821	266948	CAP. ELEC 1000 UF 25V +/-20%	ELECTRICAL COMPONENTS	27V512T		25-BDA102-M1X
C821	266948	CAP. ELEC 1000 UF 25V +/-20%	ELECTRICAL COMPONENTS	27F630T		25-BDA102-M1X
C821	266948	CAP. ELEC 1000 UF 25V +/-20%	ELECTRICAL COMPONENTS	27V520T		25-BDA102-M1X
C822	266583	CAP. CER 0.01UF 50V +80/-20% F	ELECTRICAL COMPONENTS	27V513T		26-EBP103-ZFX
C822	266583	CAP. CER 0.01UF 50V +80/-20% F	ELECTRICAL COMPONENTS	27V512T		26-EBP103-ZFX
C822	266583	CAP. CER 0.01UF 50V +80/-20% F	ELECTRICAL COMPONENTS	27V520T		26-EBP103-ZFX
C822	266583	CAP. CER 0.01UF 50V +80/-20% F	ELECTRICAL COMPONENTS	24F512T		26-EBP103-ZFX
C822	266583	CAP. CER 0.01UF 50V +80/-20% F	ELECTRICAL COMPONENTS	27F630T		26-EBP103-ZFX
C822	266583	CAP. CER 0.01UF 50V +80/-20% F	ELECTRICAL COMPONENTS	24V511T		26-EBP103-ZFX
C822	266583	CAP. CER 0.01UF 50V +80/-20% F	ELECTRICAL COMPONENTS	27F520T		26-EBP103-ZFX
C826	268331	CAP. CER 220 PF 2KV +/-10% SL	ELECTRICAL COMPONENTS	24V511T		26-AMK221-KZX
C826	268331	CAP. CER 220 PF 2KV +/-10% SL	ELECTRICAL COMPONENTS	27V513T		26-AMK221-KZX
C826	268331	CAP. CER 220 PF 2KV +/-10% SL	ELECTRICAL COMPONENTS	27V520T		26-AMK221-KZX
C826	268439	CAP. CER 470 PF 2KV +/-10%	ELECTRICAL COMPONENTS	24F512T		26-AMK471-KBX
C826	268331	CAP. CER 220 PF 2KV +/-10% SL	ELECTRICAL COMPONENTS	27F520T		26-AMK221-KZX
C826	268331	CAP. CER 220 PF 2KV +/-10% SL	ELECTRICAL COMPONENTS	27V512T		26-AMK221-KZX
C826	268331	CAP. CER 220 PF 2KV +/-10% SL	ELECTRICAL COMPONENTS	27F630T		26-AMK221-KZX
C827	266977	CAP. CER 0.01UF 500V +/-10% B	ELECTRICAL COMPONENTS	27V513T		26-AIM103-KBX
C827	266977	CAP. CER 0.01UF 500V +/-10% B	ELECTRICAL COMPONENTS	27V520T		26-AIM103-KBX
C827	266977	CAP. CER 0.01UF 500V +/-10% B	ELECTRICAL COMPONENTS	27V512T		26-AIM103-KBX
C827	266977	CAP. CER 0.01UF 500V +/-10% B	ELECTRICAL COMPONENTS	27F520T		26-AIM103-KBX
C827	266977	CAP. CER 0.01UF 500V +/-10% B	ELECTRICAL COMPONENTS	27F630T		26-AIM103-KBX
C827	266977	CAP. CER 0.01UF 500V +/-10% B	ELECTRICAL COMPONENTS	24V511T		26-AIM103-KBX
C827	266977	CAP. CER 0.01UF 500V +/-10% B	ELECTRICAL COMPONENTS	24F512T		26-AIM103-KBX
C828	268403	CAP. ELEC 330 UF 160V +/-20%	ELECTRICAL COMPONENTS	27V520T		25-BJG331-M1X
C828	268403	CAP. ELEC 330 UF 160V +/-20%	ELECTRICAL COMPONENTS	27F630T		25-BJG331-M1X
C828	268403	CAP. ELEC 330 UF 160V +/-20%	ELECTRICAL COMPONENTS	27V513T		25-BJG331-M1X
C828	268403	CAP. ELEC 330 UF 160V +/-20%	ELECTRICAL COMPONENTS	27V512T		25-BJG331-M1X
C828	268403	CAP. ELEC 330 UF 160V +/-20%	ELECTRICAL COMPONENTS	24V511T		25-BJG331-M1X

Symbol	Stock	Description	Circuit	Model	TypeCode	Drawing
C828	268403	CAP. ELEC 330 UF 160V +/-20%	ELECTRICAL COMPONENTS	27F520T		25-BJG331-M1X
C828	268403	CAP. ELEC 330 UF 160V +/-20%	ELECTRICAL COMPONENTS	24F512T		25-BJG331-M1X
C829	266954	CAP. ELEC 10 UF 50V +/-20%	ELECTRICAL COMPONENTS	24F512T		25-BFB100-M1X
C829	266954	CAP. ELEC 10 UF 50V +/-20%	ELECTRICAL COMPONENTS	24V511T		25-BFB100-M1X
C829	266954	CAP. ELEC 10 UF 50V +/-20%	ELECTRICAL COMPONENTS	27V512T		25-BFB100-M1X
C829	266954	CAP. ELEC 10 UF 50V +/-20%	ELECTRICAL COMPONENTS	27V520T		25-BFB100-M1X
C829	266954	CAP. ELEC 10 UF 50V +/-20%	ELECTRICAL COMPONENTS	27V513T		25-BFB100-M1X
C829	266954	CAP. ELEC 10 UF 50V +/-20%	ELECTRICAL COMPONENTS	27F630T		25-BFB100-M1X
C829	266954	CAP. ELEC 10 UF 50V +/-20%	ELECTRICAL COMPONENTS	27F520T		25-BFB100-M1X
C830	268319	CAP. CER 220 PF 500V +/-10% B	ELECTRICAL COMPONENTS	27F520T		26-AIC221-KBX
C830	268319	CAP. CER 220 PF 500V +/-10% B	ELECTRICAL COMPONENTS	24V511T		26-AIC221-KBX
C830	268319	CAP. CER 220 PF 500V +/-10% B	ELECTRICAL COMPONENTS	27V520T		26-AIC221-KBX
C830	268319	CAP. CER 220 PF 500V +/-10% B	ELECTRICAL COMPONENTS	27V513T		26-AIC221-KBX
C830	268319	CAP. CER 220 PF 500V +/-10% B	ELECTRICAL COMPONENTS	27F630T		26-AIC221-KBX
C830	268319	CAP. CER 220 PF 500V +/-10% B	ELECTRICAL COMPONENTS	24F512T		26-AIC221-KBX
C830	268319	CAP. CER 220 PF 500V +/-10% B	ELECTRICAL COMPONENTS	27V512T		26-AIC221-KBX
C831	266583	CAP. CER 0.01UF 50V +80/-20% F	ELECTRICAL COMPONENTS	24F512T		26-EBP103-ZFX
C831	266583	CAP. CER 0.01UF 50V +80/-20% F	ELECTRICAL COMPONENTS	27V513T		26-EBP103-ZFX
C831	266583	CAP. CER 0.01UF 50V +80/-20% F	ELECTRICAL COMPONENTS	27F630T		26-EBP103-ZFX
C831	266583	CAP. CER 0.01UF 50V +80/-20% F	ELECTRICAL COMPONENTS	27F520T		26-EBP103-ZFX
C831	266583	CAP. CER 0.01UF 50V +80/-20% F	ELECTRICAL COMPONENTS	27V520T		26-EBP103-ZFX
C831	266583	CAP. CER 0.01UF 50V +80/-20% F	ELECTRICAL COMPONENTS	27V512T		26-EBP103-ZFX
C831	266583	CAP. CER 0.01UF 50V +80/-20% F	ELECTRICAL COMPONENTS	24V511T		26-EBP103-ZFX
C832	268332	CAP. ELEC 1000 UF 16V +/-20% 1	ELECTRICAL COMPONENTS	27F630T		25-GCA102-M1X
C832	268332	CAP. ELEC 1000 UF 16V +/-20% 1	ELECTRICAL COMPONENTS	27V512T		25-GCA102-M1X
C832	268332	CAP. ELEC 1000 UF 16V +/-20% 1	ELECTRICAL COMPONENTS	24V511T		25-GCA102-M1X
C832	268332	CAP. ELEC 1000 UF 16V +/-20% 1	ELECTRICAL COMPONENTS	24F512T		25-GCA102-M1X
C832	268332	CAP. ELEC 1000 UF 16V +/-20% 1	ELECTRICAL COMPONENTS	27F520T		25-GCA102-M1X
C832	268332	CAP. ELEC 1000 UF 16V +/-20% 1	ELECTRICAL COMPONENTS	27V520T		25-GCA102-M1X
C832	268332	CAP. ELEC 1000 UF 16V +/-20% 1	ELECTRICAL COMPONENTS	27V513T		25-GCA102-M1X
C833	268333	CAP ELEC 4700UF 16V +/-20%BULK	ELECTRICAL COMPONENTS	27V513T		25-BCG472-M1X
C833	268333	CAP ELEC 4700UF 16V +/-20%BULK	ELECTRICAL COMPONENTS	27V512T		25-BCG472-M1X
C833	268333	CAP ELEC 4700UF 16V +/-20%BULK	ELECTRICAL COMPONENTS	24F512T		25-BCG472-M1X
C833	268333	CAP ELEC 4700UF 16V +/-20%BULK	ELECTRICAL COMPONENTS	24V511T		25-BCG472-M1X
C833	268333	CAP ELEC 4700UF 16V +/-20%BULK	ELECTRICAL COMPONENTS	27F630T		25-BCG472-M1X
C833	268333	CAP ELEC 4700UF 16V +/-20%BULK	ELECTRICAL COMPONENTS	27V520T		25-BCG472-M1X
C833	268333	CAP ELEC 4700UF 16V +/-20%BULK	ELECTRICAL COMPONENTS	27F520T		25-BCG472-M1X
C834	266583	CAP. CER 0.01UF 50V +80/-20% F	ELECTRICAL COMPONENTS	27F630T		26-EBP103-ZFX
C834	266583	CAP. CER 0.01UF 50V +80/-20% F	ELECTRICAL COMPONENTS	24F512T		26-EBP103-ZFX
C834	266583	CAP. CER 0.01UF 50V +80/-20% F	ELECTRICAL COMPONENTS	27V520T		26-EBP103-ZFX
C834	266583	CAP. CER 0.01UF 50V +80/-20% F	ELECTRICAL COMPONENTS	27V512T		26-EBP103-ZFX
C834	266583	CAP. CER 0.01UF 50V +80/-20% F	ELECTRICAL COMPONENTS	24V511T		26-EBP103-ZFX
C834	266583	CAP. CER 0.01UF 50V +80/-20% F	ELECTRICAL COMPONENTS	27V513T		26-EBP103-ZFX
C834	266583	CAP. CER 0.01UF 50V +80/-20% F	ELECTRICAL COMPONENTS	27F520T		26-EBP103-ZFX
C835	266583	CAP. CER 0.01UF 50V +80/-20% F	ELECTRICAL COMPONENTS	27F630T		26-EBP103-ZFX
C835	266583	CAP. CER 0.01UF 50V +80/-20% F	ELECTRICAL COMPONENTS	24V511T		26-EBP103-ZFX
C835	266583	CAP. CER 0.01UF 50V +80/-20% F	ELECTRICAL COMPONENTS	27V512T		26-EBP103-ZFX
C835	266583	CAP. CER 0.01UF 50V +80/-20% F	ELECTRICAL COMPONENTS	24F512T		26-EBP103-ZFX
C835	266583	CAP. CER 0.01UF 50V +80/-20% F	ELECTRICAL COMPONENTS	27F520T		26-EBP103-ZFX
C835	266583	CAP. CER 0.01UF 50V +80/-20% F	ELECTRICAL COMPONENTS	27V513T		26-EBP103-ZFX
C835	266583	CAP. CER 0.01UF 50V +80/-20% F	ELECTRICAL COMPONENTS	27V520T		26-EBP103-ZFX
C836	268323	CAP. ELEC 470 UF 16V +/-20%	ELECTRICAL COMPONENTS	27F630T		25-BCB471-M1X
C836	268323	CAP. ELEC 470 UF 16V +/-20%	ELECTRICAL COMPONENTS	27V520T		25-BCB471-M1X
C836	268323	CAP. ELEC 470 UF 16V +/-20%	ELECTRICAL COMPONENTS	27V513T		25-BCB471-M1X
C836	268323	CAP. ELEC 470 UF 16V +/-20%	ELECTRICAL COMPONENTS	27V512T		25-BCB471-M1X
C836	268323	CAP. ELEC 470 UF 16V +/-20%	ELECTRICAL COMPONENTS	24V511T		25-BCB471-M1X
C836	268323	CAP. ELEC 470 UF 16V +/-20%	ELECTRICAL COMPONENTS	27F520T		25-BCB471-M1X
C836	268323	CAP. ELEC 470 UF 16V +/-20%	ELECTRICAL COMPONENTS	24F512T		25-BCB471-M1X
C840	266982	CAP. CER 2200PF 400VAC+/-20% E	ELECTRICAL COMPONENTS	27V513T	S	26-APK222-ME4
C840	266982	CAP. CER 2200PF 400VAC+/-20% E	ELECTRICAL COMPONENTS	24V511T		26-APK222-ME4

Symbol	Stock	Description	Circuit	Model	TypeCode	Drawing
C840	266982	CAP. CER 2200PF 400VAC+/-20% E	ELECTRICAL COMPONENTS	27V520T	S	26-APK222-ME4
C840	266982	CAP. CER 2200PF 400VAC+/-20% E	ELECTRICAL COMPONENTS	27V512T	S	26-APK222-ME4
C840	266982	CAP. CER 2200PF 400VAC+/-20% E	ELECTRICAL COMPONENTS	27F520T	S	26-APK222-ME4
C840	266982	CAP. CER 2200PF 400VAC+/-20% E	ELECTRICAL COMPONENTS	24F512T	S	26-APK222-ME4
C840	266982	CAP. CER 2200PF 400VAC+/-20% E	ELECTRICAL COMPONENTS	27F630T	S	26-APK222-ME4
C902	266583	CAP. CER 0.01UF 50V +80/-20% F	ELECTRICAL COMPONENTS	24V511T		26-EBP103-ZFX
C902	266583	CAP. CER 0.01UF 50V +80/-20% F	ELECTRICAL COMPONENTS	27V512T		26-EBP103-ZFX
C902	266583	CAP. CER 0.01UF 50V +80/-20% F	ELECTRICAL COMPONENTS	24F512T		26-EBP103-ZFX
C902	266583	CAP. CER 0.01UF 50V +80/-20% F	ELECTRICAL COMPONENTS	27V513T		26-EBP103-ZFX
C902	266583	CAP. CER 0.01UF 50V +80/-20% F	ELECTRICAL COMPONENTS	27F520T		26-EBP103-ZFX
C902	266583	CAP. CER 0.01UF 50V +80/-20% F	ELECTRICAL COMPONENTS	27V520T		26-EBP103-ZFX
C902	266583	CAP. CER 0.01UF 50V +80/-20% F	ELECTRICAL COMPONENTS	27F630T		26-EBP103-ZFX
C903	266947	CAP. ELEC 47 UF 16V +/-20%	ELECTRICAL COMPONENTS	27V513T		25-BCB470-M1X
C903	266947	CAP. ELEC 47 UF 16V +/-20%	ELECTRICAL COMPONENTS	27F630T		25-BCB470-M1X
C903	266947	CAP. ELEC 47 UF 16V +/-20%	ELECTRICAL COMPONENTS	27V512T		25-BCB470-M1X
C903	266947	CAP. ELEC 47 UF 16V +/-20%	ELECTRICAL COMPONENTS	27V520T		25-BCB470-M1X
C903	266947	CAP. ELEC 47 UF 16V +/-20%	ELECTRICAL COMPONENTS	24F512T		25-BCB470-M1X
C903	266947	CAP. ELEC 47 UF 16V +/-20%	ELECTRICAL COMPONENTS	27F520T		25-BCB470-M1X
C903	266947	CAP. ELEC 47 UF 16V +/-20%	ELECTRICAL COMPONENTS	24V511T		25-BCB470-M1X
C904	266581	CAP. ELEC 10 UF 16V +/-20%	ELECTRICAL COMPONENTS	27V513T		25-BCB100-M1X
C904	266581	CAP. ELEC 10 UF 16V +/-20%	ELECTRICAL COMPONENTS	27V520T		25-BCB100-M1X
C904	266581	CAP. ELEC 10 UF 16V +/-20%	ELECTRICAL COMPONENTS	24F512T		25-BCB100-M1X
C904	266581	CAP. ELEC 10 UF 16V +/-20%	ELECTRICAL COMPONENTS	27F520T		25-BCB100-M1X
C904	266581	CAP. ELEC 10 UF 16V +/-20%	ELECTRICAL COMPONENTS	24V511T		25-BCB100-M1X
C904	266581	CAP. ELEC 10 UF 16V +/-20%	ELECTRICAL COMPONENTS	27V512T		25-BCB100-M1X
C904	266581	CAP. ELEC 10 UF 16V +/-20%	ELECTRICAL COMPONENTS	27F630T		25-BCB100-M1X
C905	266581	CAP. ELEC 10 UF 16V +/-20%	ELECTRICAL COMPONENTS	27F630T		25-BCB100-M1X
C905	266581	CAP. ELEC 10 UF 16V +/-20%	ELECTRICAL COMPONENTS	27V520T		25-BCB100-M1X
C905	266581	CAP. ELEC 10 UF 16V +/-20%	ELECTRICAL COMPONENTS	27V512T		25-BCB100-M1X
C905	266581	CAP. ELEC 10 UF 16V +/-20%	ELECTRICAL COMPONENTS	27V513T		25-BCB100-M1X
C905	266581	CAP. ELEC 10 UF 16V +/-20%	ELECTRICAL COMPONENTS	24F512T		25-BCB100-M1X
C905	266581	CAP. ELEC 10 UF 16V +/-20%	ELECTRICAL COMPONENTS	27F520T		25-BCB100-M1X
C905	266581	CAP. ELEC 10 UF 16V +/-20%	ELECTRICAL COMPONENTS	24V511T		25-BCB100-M1X
C908	266947	CAP. ELEC 47 UF 16V +/-20%	ELECTRICAL COMPONENTS	27V513T		25-BCB470-M1X
C908	266947	CAP. ELEC 47 UF 16V +/-20%	ELECTRICAL COMPONENTS	27V520T		25-BCB470-M1X
C908	266947	CAP. ELEC 47 UF 16V +/-20%	ELECTRICAL COMPONENTS	27F630T		25-BCB470-M1X
C908	266947	CAP. ELEC 47 UF 16V +/-20%	ELECTRICAL COMPONENTS	27F520T		25-BCB470-M1X
C908	266947	CAP. ELEC 47 UF 16V +/-20%	ELECTRICAL COMPONENTS	24V511T		25-BCB470-M1X
C908	266947	CAP. ELEC 47 UF 16V +/-20%	ELECTRICAL COMPONENTS	27V512T		25-BCB470-M1X
C908	266947	CAP. ELEC 47 UF 16V +/-20%	ELECTRICAL COMPONENTS	24F512T		25-BCB470-M1X
C909	266581	CAP. ELEC 10 UF 16V +/-20%	ELECTRICAL COMPONENTS	27F630T		25-BCB100-M1X
C909	266581	CAP. ELEC 10 UF 16V +/-20%	ELECTRICAL COMPONENTS	27V520T		25-BCB100-M1X
C909	266581	CAP. ELEC 10 UF 16V +/-20%	ELECTRICAL COMPONENTS	24F512T		25-BCB100-M1X
C909	266581	CAP. ELEC 10 UF 16V +/-20%	ELECTRICAL COMPONENTS	24V511T		25-BCB100-M1X
C909	266581	CAP. ELEC 10 UF 16V +/-20%	ELECTRICAL COMPONENTS	27F520T		25-BCB100-M1X
C909	266581	CAP. ELEC 10 UF 16V +/-20%	ELECTRICAL COMPONENTS	27V513T		25-BCB100-M1X
C909	266581	CAP. ELEC 10 UF 16V +/-20%	ELECTRICAL COMPONENTS	27V512T		25-BCB100-M1X
C910	266581	CAP. ELEC 10 UF 16V +/-20%	ELECTRICAL COMPONENTS	27V512T		25-BCB100-M1X
C910	266581	CAP. ELEC 10 UF 16V +/-20%	ELECTRICAL COMPONENTS	27F630T		25-BCB100-M1X
C910	266581	CAP. ELEC 10 UF 16V +/-20%	ELECTRICAL COMPONENTS	27V520T		25-BCB100-M1X
C910	266581	CAP. ELEC 10 UF 16V +/-20%	ELECTRICAL COMPONENTS	27F520T		25-BCB100-M1X
C910	266581	CAP. ELEC 10 UF 16V +/-20%	ELECTRICAL COMPONENTS	27V513T		25-BCB100-M1X
C910	266581	CAP. ELEC 10 UF 16V +/-20%	ELECTRICAL COMPONENTS	24V511T		25-BCB100-M1X
C910	266581	CAP. ELEC 10 UF 16V +/-20%	ELECTRICAL COMPONENTS	24F512T		25-BCB100-M1X
C911	266583	CAP. CER 0.01UF 50V +80/-20% F	ELECTRICAL COMPONENTS	27V520T		26-EBP103-ZFX
C911	266583	CAP. CER 0.01UF 50V +80/-20% F	ELECTRICAL COMPONENTS	27V512T		26-EBP103-ZFX
C911	266583	CAP. CER 0.01UF 50V +80/-20% F	ELECTRICAL COMPONENTS	24F512T		26-EBP103-ZFX
C911	266583	CAP. CER 0.01UF 50V +80/-20% F	ELECTRICAL COMPONENTS	27V513T		26-EBP103-ZFX
C911	266583	CAP. CER 0.01UF 50V +80/-20% F	ELECTRICAL COMPONENTS	24V511T		26-EBP103-ZFX
C911	266583	CAP. CER 0.01UF 50V +80/-20% F	ELECTRICAL COMPONENTS	27F520T		26-EBP103-ZFX

Symbol	Stock	Description	Circuit	Model	TypeCode	Drawing
C911	266583	CAP. CER 0.01UF 50V +80/-20% F	ELECTRICAL COMPONENTS	27F630T		26-EBP103-ZFX
C912	266598	CAP. ELEC 100 UF 16V +/-20%	ELECTRICAL COMPONENTS	27F520T		25-BCB101-M1X
C912	266598	CAP. ELEC 100 UF 16V +/-20%	ELECTRICAL COMPONENTS	27V513T		25-BCB101-M1X
C912	266598	CAP. ELEC 100 UF 16V +/-20%	ELECTRICAL COMPONENTS	27V520T		25-BCB101-M1X
C912	266598	CAP. ELEC 100 UF 16V +/-20%	ELECTRICAL COMPONENTS	24V511T		25-BCB101-M1X
C912	266598	CAP. ELEC 100 UF 16V +/-20%	ELECTRICAL COMPONENTS	27F630T		25-BCB101-M1X
C912	266598	CAP. ELEC 100 UF 16V +/-20%	ELECTRICAL COMPONENTS	24F512T		25-BCB101-M1X
C912	266598	CAP. ELEC 100 UF 16V +/-20%	ELECTRICAL COMPONENTS	27V512T		25-BCB101-M1X
C913	266583	CAP. CER 0.01UF 50V +80/-20% F	ELECTRICAL COMPONENTS	27F520T		26-EBP103-ZFX
C913	266583	CAP. CER 0.01UF 50V +80/-20% F	ELECTRICAL COMPONENTS	27F630T		26-EBP103-ZFX
C913	266583	CAP. CER 0.01UF 50V +80/-20% F	ELECTRICAL COMPONENTS	27V513T		26-EBP103-ZFX
C913	266583	CAP. CER 0.01UF 50V +80/-20% F	ELECTRICAL COMPONENTS	27V512T		26-EBP103-ZFX
C913	266583	CAP. CER 0.01UF 50V +80/-20% F	ELECTRICAL COMPONENTS	27V520T		26-EBP103-ZFX
C913	266583	CAP. CER 0.01UF 50V +80/-20% F	ELECTRICAL COMPONENTS	24F512T		26-EBP103-ZFX
C913	266583	CAP. CER 0.01UF 50V +80/-20% F	ELECTRICAL COMPONENTS	24V511T		26-EBP103-ZFX
C914	266598	CAP. ELEC 100 UF 16V +/-20%	ELECTRICAL COMPONENTS	27F520T		25-BCB101-M1X
C914	266598	CAP. ELEC 100 UF 16V +/-20%	ELECTRICAL COMPONENTS	27F630T		25-BCB101-M1X
C914	266598	CAP. ELEC 100 UF 16V +/-20%	ELECTRICAL COMPONENTS	24V511T		25-BCB101-M1X
C914	266598	CAP. ELEC 100 UF 16V +/-20%	ELECTRICAL COMPONENTS	27V513T		25-BCB101-M1X
C914	266598	CAP. ELEC 100 UF 16V +/-20%	ELECTRICAL COMPONENTS	27V512T		25-BCB101-M1X
C914	266598	CAP. ELEC 100 UF 16V +/-20%	ELECTRICAL COMPONENTS	24F512T		25-BCB101-M1X
C914	266598	CAP. ELEC 100 UF 16V +/-20%	ELECTRICAL COMPONENTS	27V520T		25-BCB101-M1X
C915	266582	CAP. CER 1000 PF 50V +/-10% B	ELECTRICAL COMPONENTS	27F630T		26-EBP102-KBX
C915	266582	CAP. CER 1000 PF 50V +/-10% B	ELECTRICAL COMPONENTS	24V511T		26-EBP102-KBX
C915	266582	CAP. CER 1000 PF 50V +/-10% B	ELECTRICAL COMPONENTS	27V512T		26-EBP102-KBX
C915	266582	CAP. CER 1000 PF 50V +/-10% B	ELECTRICAL COMPONENTS	27V520T		26-EBP102-KBX
C915	266582	CAP. CER 1000 PF 50V +/-10% B	ELECTRICAL COMPONENTS	24F512T		26-EBP102-KBX
C915	266582	CAP. CER 1000 PF 50V +/-10% B	ELECTRICAL COMPONENTS	27F520T		26-EBP102-KBX
C915	266582	CAP. CER 1000 PF 50V +/-10% B	ELECTRICAL COMPONENTS	27V513T		26-EBP102-KBX
C916	266582	CAP. CER 1000 PF 50V +/-10% B	ELECTRICAL COMPONENTS	24V511T		26-EBP102-KBX
C916	266582	CAP. CER 1000 PF 50V +/-10% B	ELECTRICAL COMPONENTS	24F512T		26-EBP102-KBX
C916	266582	CAP. CER 1000 PF 50V +/-10% B	ELECTRICAL COMPONENTS	27V512T		26-EBP102-KBX
C916	266582	CAP. CER 1000 PF 50V +/-10% B	ELECTRICAL COMPONENTS	27F520T		26-EBP102-KBX
C916	266582	CAP. CER 1000 PF 50V +/-10% B	ELECTRICAL COMPONENTS	27F630T		26-EBP102-KBX
C916	266582	CAP. CER 1000 PF 50V +/-10% B	ELECTRICAL COMPONENTS	27V513T		26-EBP102-KBX
C916	266582	CAP. CER 1000 PF 50V +/-10% B	ELECTRICAL COMPONENTS	27V520T		26-EBP102-KBX
C924	266581	CAP. ELEC 10 UF 16V +/-20%	ELECTRICAL COMPONENTS	24F512T		25-BCB100-M1X
C924	266581	CAP. ELEC 10 UF 16V +/-20%	ELECTRICAL COMPONENTS	24V511T		25-BCB100-M1X
C924	266581	CAP. ELEC 10 UF 16V +/-20%	ELECTRICAL COMPONENTS	27F630T		25-BCB100-M1X
C924	266581	CAP. ELEC 10 UF 16V +/-20%	ELECTRICAL COMPONENTS	27V520T		25-BCB100-M1X
C924	266581	CAP. ELEC 10 UF 16V +/-20%	ELECTRICAL COMPONENTS	27F520T		25-BCB100-M1X
C925	268295	CAP. CER 33PF 50V +/-5% CH	ELECTRICAL COMPONENTS	24F512T		26-EBP330-JCX
C925	268295	CAP. CER 33PF 50V +/-5% CH	ELECTRICAL COMPONENTS	24V511T		26-EBP330-JCX
C925	268295	CAP. CER 33PF 50V +/-5% CH	ELECTRICAL COMPONENTS	27V520T		26-EBP330-JCX
C925	268295	CAP. CER 33PF 50V +/-5% CH	ELECTRICAL COMPONENTS	27F520T		26-EBP330-JCX
C925	268295	CAP. CER 33PF 50V +/-5% CH	ELECTRICAL COMPONENTS	27F630T		26-EBP330-JCX
C926	266946	CAP. ELEC 220 UF 16V +/-20%	ELECTRICAL COMPONENTS	24V511T		25-BCB221-M1X
C926	266946	CAP. ELEC 220 UF 16V +/-20%	ELECTRICAL COMPONENTS	24F512T		25-BCB221-M1X
C926	266946	CAP. ELEC 220 UF 16V +/-20%	ELECTRICAL COMPONENTS	27F520T		25-BCB221-M1X
C926	266946	CAP. ELEC 220 UF 16V +/-20%	ELECTRICAL COMPONENTS	27F630T		25-BCB221-M1X
C926	266946	CAP. ELEC 220 UF 16V +/-20%	ELECTRICAL COMPONENTS	27V520T		25-BCB221-M1X
C927	266581	CAP. ELEC 10 UF 16V +/-20%	ELECTRICAL COMPONENTS	27F520T		25-BCB100-M1X
C927	266581	CAP. ELEC 10 UF 16V +/-20%	ELECTRICAL COMPONENTS	24V511T		25-BCB100-M1X
C927	266581	CAP. ELEC 10 UF 16V +/-20%	ELECTRICAL COMPONENTS	24F512T		25-BCB100-M1X
C927	266581	CAP. ELEC 10 UF 16V +/-20%	ELECTRICAL COMPONENTS	27F630T		25-BCB100-M1X
C927	266581	CAP. ELEC 10 UF 16V +/-20%	ELECTRICAL COMPONENTS	27V520T		25-BCB100-M1X
C928	266581	CAP. ELEC 10 UF 16V +/-20%	ELECTRICAL COMPONENTS	24V511T		25-BCB100-M1X
C928	266581	CAP. ELEC 10 UF 16V +/-20%	ELECTRICAL COMPONENTS	27F520T		25-BCB100-M1X
C928	266581	CAP. ELEC 10 UF 16V +/-20%	ELECTRICAL COMPONENTS	24F512T		25-BCB100-M1X
C928	266581	CAP. ELEC 10 UF 16V +/-20%	ELECTRICAL COMPONENTS	27F630T		25-BCB100-M1X

Symbol	Stock	Description	Circuit	Model	TypeCode	Drawing
C928	266581	CAP. ELEC 10 UF 16V +/-20%	ELECTRICAL COMPONENTS	27V520T		25-BCB100-M1X
C929	266583	CAP. CER 0.01UF 50V +80/-20% F	ELECTRICAL COMPONENTS	24V511T		26-EBP103-ZFX
C929	266583	CAP. CER 0.01UF 50V +80/-20% F	ELECTRICAL COMPONENTS	27F520T		26-EBP103-ZFX
C929	266583	CAP. CER 0.01UF 50V +80/-20% F	ELECTRICAL COMPONENTS	27F630T		26-EBP103-ZFX
C929	266583	CAP. CER 0.01UF 50V +80/-20% F	ELECTRICAL COMPONENTS	24F512T		26-EBP103-ZFX
C929	266583	CAP. CER 0.01UF 50V +80/-20% F	ELECTRICAL COMPONENTS	27V520T		26-EBP103-ZFX
C930	266598	CAP. ELEC 100 UF 16V +/-20%	ELECTRICAL COMPONENTS	27V520T		25-BCB101-M1X
C930	266598	CAP. ELEC 100 UF 16V +/-20%	ELECTRICAL COMPONENTS	24V511T		25-BCB101-M1X
C930	266598	CAP. ELEC 100 UF 16V +/-20%	ELECTRICAL COMPONENTS	27F630T		25-BCB101-M1X
C930	266598	CAP. ELEC 100 UF 16V +/-20%	ELECTRICAL COMPONENTS	27F520T		25-BCB101-M1X
C930	266598	CAP. ELEC 100 UF 16V +/-20%	ELECTRICAL COMPONENTS	24F512T		25-BCB101-M1X
CABINET	MK2641	FRT 27#453 MASA	INSTRUMENT	27V513T	S	16294850
CABINET	268481	REAR CABINET	INSTRUMENT	24V511T	S	35798360
CABINET	MK2584	MASK & BACK ASSY	INSTRUMENT	27V512T	S	16150120
CABINET	MK2640	FRT CABINET 27	INSTRUMENT	27F630T	S	16433860
CABINET	268495	BACKCOVER 453US	INSTRUMENT	27V513T	S	25763870
CABINET	MK2639	FRONT CABINET	INSTRUMENT	24V511T	S	35833700
CABINET	MK2586	MASK & BACK ASSY	INSTRUMENT	27F520T	S	16160420
CABINET	268495	BACKCOVER 453US	INSTRUMENT	27V512T	S	25763870
CABINET	268495	BACKCOVER 453US	INSTRUMENT	27V520T	S	25763870
CABINET	268465	REAR CABINET	INSTRUMENT	24F512T	S	08-C185N6-RCN
CABINET	MK2638	CABINET, FRONT	INSTRUMENT	24F512T	S	08-C185N6-FC2
CABINET	268492	BACKCOVER	INSTRUMENT	27F630T	S	2576389A
CABINET	268453	BACKCOVER 464US M134 BK -	INSTRUMENT	27F520T	S	25763830
CABLE	267041	CABLE, 5 PIN 450	ELECTRICAL COMPONENTS	27V520T		46-37030H-05X
CABLE	267041	CABLE, 5 PIN 450	ELECTRICAL COMPONENTS	24F512T		46-37030H-05X
CABLE	258027	FASTENER, AC CABLE	INSTRUMENT	27F520T	S	2556925B
CABLE	267041	CABLE, 5 PIN 450	ELECTRICAL COMPONENTS	27F520T		46-37030H-05X
CABLE	267041	CABLE, 5 PIN 450	ELECTRICAL COMPONENTS	24V511T		46-37030H-05X
CABLE	267041	CABLE, 5 PIN 450	ELECTRICAL COMPONENTS	27V512T		46-37030H-05X
CABLE	267041	CABLE, 5 PIN 450	ELECTRICAL COMPONENTS	27F630T		46-37030H-05X
CABLE	268426	HS 4P 1185#26/1007#24 650MM TJ	ELECTRICAL COMPONENTS	27V513T		46-CD065F-04001
CABLE	268426	HS 4P 1185#26/1007#24 650MM TJ	ELECTRICAL COMPONENTS	27V512T		46-CD065F-04001
CABLE	267041	CABLE, 5 PIN 450	ELECTRICAL COMPONENTS	27V513T		46-37030H-05X
CAPACITOR	266583	CAP. CER 0.01UF 50V +80/-20% F	ELECTRICAL COMPONENTS	24V511T		26-EBP103-ZFX
CAPACITOR	266954	CAP. ELEC 10 UF 50V +/-20%	ELECTRICAL COMPONENTS	27F520T		25-BFB100-M1X
CAPACITOR	266954	CAP. ELEC 10 UF 50V +/-20%	ELECTRICAL COMPONENTS	27V520T		25-BFB100-M1X
CAPACITOR	266954	CAP. ELEC 10 UF 50V +/-20%	ELECTRICAL COMPONENTS	24F512T		25-BFB100-M1X
CAPACITOR	266954	CAP. ELEC 10 UF 50V +/-20%	ELECTRICAL COMPONENTS	24V511T		25-BFB100-M1X
CAPACITOR	266954	CAP. ELEC 10 UF 50V +/-20%	ELECTRICAL COMPONENTS	27F630T		25-BFB100-M1X
CIRCUIT	268282	CIRCUIT, CRT BD	ELECTRICAL COMPONENTS	27F520T		08-P453A6-CRY
CIRCUIT	268282	CIRCUIT, CRT BD	ELECTRICAL COMPONENTS	27V520T		08-P453A6-CRY
CIRCUIT	268432	CIRCUIT, CRT BD	ELECTRICAL COMPONENTS	24F512T		08-C185N6-CRY
CIRCUIT	268446	CIRCUIT, CRT BD	ELECTRICAL COMPONENTS	24V511T		08-C228A6-CRY
CIRCUIT	268282	CIRCUIT, CRT BD	ELECTRICAL COMPONENTS	27F630T		08-P453A6-CRY
CIRCUIT	268282	CIRCUIT, CRT BD	ELECTRICAL COMPONENTS	27V512T		08-P453A6-CRY
CIRCUIT	268282	CIRCUIT, CRT BD	ELECTRICAL COMPONENTS	27V513T		08-P453A6-CRY
CJ010	268457	POWER CORD	INSTRUMENT	27V512T	S	60126010
CJ010	268457	POWER CORD	INSTRUMENT	27V513T		60126010
CJ012	258027	FASTENER, AC CABLE	INSTRUMENT	27V513T	S	2556925B
CJ012	258027	FASTENER, AC CABLE	INSTRUMENT	27V512T	S	2556925B
CJ080	268463	HS 2P22 600/7	INSTRUMENT	27V512T		35798020
CJ080	268463	HS 2P22 600/7	INSTRUMENT	27V513T		35798020
CJ081	268463	HS 2P22 600/7	INSTRUMENT	27V512T		35798020
CJ081	268463	HS 2P22 600/7	INSTRUMENT	27V513T		35798020
CLUSTER	257999	BUTTON CLUSTER	INSTRUMENT	27V512T		1596643B
CLUSTER	258024	BUTTON CLUSTER	INSTRUMENT	27F520T		15966870
CLUSTER	268500	BTN CLSTR	INSTRUMENT	27V513T		2572088A
COIL	268398	CRT COIL MTG 25"/29"	ELECTRICAL COMPONENTS	27V513T		62-321780-0HG
COIL	268455	CRT COIL MTG 25"	INSTRUMENT	27F520T		60135960

Symbol	Stock	Description	Circuit	Model	TypeCode	Drawing
COIL	268455	CRT COIL MTG 25"	INSTRUMENT	27F630T		60135960
COIL	268454	DEGAUSSING COIL	INSTRUMENT	27F630T	S	16419340
COIL	268398	CRT COIL MTG 25"/29"	INSTRUMENT	24F512T		62-321780-0HG
COIL	268454	DEGAUSSING COIL	INSTRUMENT	27V512T	S	16419340
COIL	268398	CRT COIL MTG 25"/29"	ELECTRICAL COMPONENTS	27V512T		62-321780-0HG
COIL	268466	DEGAUSSING COIL 2730MM	INSTRUMENT	24F512T	S	36-DEG250-XX2
COIL	268454	DEGAUSSING COIL	INSTRUMENT	27V513T	S	16419340
COIL	268454	DEGAUSSING COIL	INSTRUMENT	27V520T	S	16419340
COIL	268482	DEGAUSSING COIL	INSTRUMENT	24V511T	S	35797580
COIL	268454	DEGAUSSING COIL	INSTRUMENT	27F520T	S	16419340
CONN	267025	CONNECTOR, 4 PIN	ELECTRICAL COMPONENTS	27V513T		46-33079W-04X
CONN	266580	PIN BASE	ELECTRICAL COMPONENTS	27V513T		46-33079W-05X
CONN	268463	HS 2P22 600/7	INSTRUMENT	27V520T		35798020
CONN	268456	4P A/B 500/1	INSTRUMENT	27V520T		16419080
CONN	267021	CONNECTOR, 1 PIN	ELECTRICAL COMPONENTS	27V513T		46-10967W-01X
CONN	268456	4P A/B 500/1	INSTRUMENT	27F520T		16419080
CONN	268456	4P A/B 500/1	INSTRUMENT	27V513T		16419080
CONN	268463	HS 2P22 600/7	INSTRUMENT	27F630T		35798020
CONN	268456	4P A/B 500/1	INSTRUMENT	27V512T		16419080
CONN	268456	4P A/B 500/1	INSTRUMENT	27F630T		16419080
CONN	268463	HS 2P22 600/7	INSTRUMENT	27F520T		35798020
CONN	268463	HS 2P22 600/7	INSTRUMENT	24V511T		35798020
CONN	266580	PIN BASE	ELECTRICAL COMPONENTS	27V512T		46-33079W-05X
CONN	267021	CONNECTOR, 1 PIN	ELECTRICAL COMPONENTS	27V512T		46-10967W-01X
CONN	267025	CONNECTOR, 4 PIN	ELECTRICAL COMPONENTS	27V512T		46-33079W-04X
CONNE	267025	CONNECTOR, 4 PIN	ELECTRICAL COMPONENTS	24V511T		46-33079W-04X
CONNE	267025	CONNECTOR, 4 PIN	ELECTRICAL COMPONENTS	27V520T		46-33079W-04X
CONNE	267021	CONNECTOR, 1 PIN	ELECTRICAL COMPONENTS	24F512T		46-10967W-01X
CONNE	267025	CONNECTOR, 4 PIN	ELECTRICAL COMPONENTS	24F512T		46-33079W-04X
CONNE	267025	CONNECTOR, 4 PIN	ELECTRICAL COMPONENTS	27F630T		46-33079W-04X
CONNE	267021	CONNECTOR, 1 PIN	ELECTRICAL COMPONENTS	27F630T		46-10967W-01X
CONNE	267021	CONNECTOR, 1 PIN	ELECTRICAL COMPONENTS	24V511T		46-10967W-01X
CONNE	267021	CONNECTOR, 1 PIN	ELECTRICAL COMPONENTS	27F520T		46-10967W-01X
CONNE	267025	CONNECTOR, 4 PIN	ELECTRICAL COMPONENTS	27F520T		46-33079W-04X
CONNE	267021	CONNECTOR, 1 PIN	ELECTRICAL COMPONENTS	27V520T		46-10967W-01X
CONNECTO	268395	HS 2P22 600/7 TJC3-2Y	INSTRUMENT	24F512T		46-27580H-02X
CONNECTO	268467	4P TJC1-4Y	INSTRUMENT	24F512T		46-20600H-04X
CORD	268457	POWER CORD	INSTRUMENT	27V520T	S	60126010
CORD	268457	POWER CORD	INSTRUMENT	27F630T		60126010
CORD	268457	POWER CORD	INSTRUMENT	24V511T		60126010
CORD	268457	POWER CORD	INSTRUMENT	27F520T	S	60126010
COVER	261070	COVER FOR CABINET SLOT	INSTRUMENT	27V520T	S	2561167A
COVER	261070	COVER FOR CABINET SLOT	INSTRUMENT	27V513T	S	2561167A
COVER	261070	COVER FOR CABINET SLOT	INSTRUMENT	27V512T	S	2561167A
COVER	263555	COVER, FRONT A/V IN	INSTRUMENT	27F630T		2566835A
CRT	268402	CRT BRACKET	ELECTRICAL COMPONENTS	27V520T		67-M40068-1E4
CRT	268402	CRT BRACKET	ELECTRICAL COMPONENTS	27F630T		67-M40068-1E4
CRT	268398	CRT COIL MTG 25"/29"	ELECTRICAL COMPONENTS	27F630T		62-321780-0HG
CRT	268398	CRT COIL MTG 25"/29"	ELECTRICAL COMPONENTS	27V520T		62-321780-0HG
CRT	268402	CRT BRACKET	ELECTRICAL COMPONENTS	24V511T		67-M40068-1E4
CRT	268402	CRT BRACKET	ELECTRICAL COMPONENTS	24F512T		67-M40068-1E4
CRT	268398	CRT COIL MTG 25"/29"	ELECTRICAL COMPONENTS	27F520T		62-321780-0HG
CRT	268402	CRT BRACKET	ELECTRICAL COMPONENTS	27F520T		67-M40068-1E4
D001	268334	DIODE 500MW 5.1HSB	ELECTRICAL COMPONENTS	27F520T		10-HS5V1B-DBX
D001	268334	DIODE 500MW 5.1HSB	ELECTRICAL COMPONENTS	27F630T		10-HS5V1B-DBX
D001	268334	DIODE 500MW 5.1HSB	ELECTRICAL COMPONENTS	24F512T		10-HS5V1B-DBX
D001	268334	DIODE 500MW 5.1HSB	ELECTRICAL COMPONENTS	24V511T		10-HS5V1B-DBX
D001	268334	DIODE 500MW 5.1HSB	ELECTRICAL COMPONENTS	27V513T		10-HS5V1B-DBX
D001	268334	DIODE 500MW 5.1HSB	ELECTRICAL COMPONENTS	27V512T		10-HS5V1B-DBX
D001	268334	DIODE 500MW 5.1HSB	ELECTRICAL COMPONENTS	27V520T		10-HS5V1B-DBX

Symbol	Stock	Description	Circuit	Model	TypeCode	Drawing
D01	266885	DIODE 1N4148 (SWITCHING)	ELECTRICAL COMPONENTS	27V512T		10-1N4148-ABX
D01	266885	DIODE 1N4148 (SWITCHING)	ELECTRICAL COMPONENTS	24F512T		10-1N4148-ABX
D01	266885	DIODE 1N4148 (SWITCHING)	ELECTRICAL COMPONENTS	27F630T		10-1N4148-ABX
D01	266885	DIODE 1N4148 (SWITCHING)	ELECTRICAL COMPONENTS	27V520T		10-1N4148-ABX
D01	266885	DIODE 1N4148 (SWITCHING)	ELECTRICAL COMPONENTS	24V511T		10-1N4148-ABX
D01	266885	DIODE 1N4148 (SWITCHING)	ELECTRICAL COMPONENTS	27V513T		10-1N4148-ABX
D01	266885	DIODE 1N4148 (SWITCHING)	ELECTRICAL COMPONENTS	27F520T		10-1N4148-ABX
D02	266885	DIODE 1N4148 (SWITCHING)	ELECTRICAL COMPONENTS	27V512T		10-1N4148-ABX
D02	266885	DIODE 1N4148 (SWITCHING)	ELECTRICAL COMPONENTS	24F512T		10-1N4148-ABX
D02	266885	DIODE 1N4148 (SWITCHING)	ELECTRICAL COMPONENTS	24V511T		10-1N4148-ABX
D02	266885	DIODE 1N4148 (SWITCHING)	ELECTRICAL COMPONENTS	27V520T		10-1N4148-ABX
D02	266885	DIODE 1N4148 (SWITCHING)	ELECTRICAL COMPONENTS	27V513T		10-1N4148-ABX
D02	266885	DIODE 1N4148 (SWITCHING)	ELECTRICAL COMPONENTS	27F520T		10-1N4148-ABX
D02	266885	DIODE 1N4148 (SWITCHING)	ELECTRICAL COMPONENTS	27F630T		10-1N4148-ABX
D1001A	268440	LED RED ?3MM FO203	ELECTRICAL COMPONENTS	24F512T		14-LED03R-XX1
D1001A	266915	LED RED FB205	ELECTRICAL COMPONENTS	27F630T		14-LED05R-XX1
D1001A	266915	LED RED FB205	ELECTRICAL COMPONENTS	24V511T		14-LED05R-XX1
D1001B	266915	LED RED FB205	ELECTRICAL COMPONENTS	27V520T		14-LED05R-XX1
D1001B	266915	LED RED FB205	ELECTRICAL COMPONENTS	27V513T		14-LED05R-XX1
D1001B	266915	LED RED FB205	ELECTRICAL COMPONENTS	27V512T		14-LED05R-XX1
D1001B	266915	LED RED FB205	ELECTRICAL COMPONENTS	27F520T		14-LED05R-XX1
D101	266892	DIODE CW574CD	ELECTRICAL COMPONENTS	27F630T		10-CW574C-DJX
D101	266892	DIODE CW574CD	ELECTRICAL COMPONENTS	24F512T		10-CW574C-DJX
D101	266892	DIODE CW574CD	ELECTRICAL COMPONENTS	27F520T		10-CW574C-DJX
D101	266892	DIODE CW574CD	ELECTRICAL COMPONENTS	27V512T		10-CW574C-DJX
D101	266892	DIODE CW574CD	ELECTRICAL COMPONENTS	27V513T		10-CW574C-DJX
D101	266892	DIODE CW574CD	ELECTRICAL COMPONENTS	27V520T		10-CW574C-DJX
D101	266892	DIODE CW574CD	ELECTRICAL COMPONENTS	24V511T		10-CW574C-DJX
D202	266885	DIODE 1N4148 (SWITCHING)	ELECTRICAL COMPONENTS	27F630T		10-1N4148-ABX
D202	266885	DIODE 1N4148 (SWITCHING)	ELECTRICAL COMPONENTS	27F520T		10-1N4148-ABX
D202	266885	DIODE 1N4148 (SWITCHING)	ELECTRICAL COMPONENTS	24V511T		10-1N4148-ABX
D202	266885	DIODE 1N4148 (SWITCHING)	ELECTRICAL COMPONENTS	27V520T		10-1N4148-ABX
D202	266885	DIODE 1N4148 (SWITCHING)	ELECTRICAL COMPONENTS	27V513T		10-1N4148-ABX
D202	266885	DIODE 1N4148 (SWITCHING)	ELECTRICAL COMPONENTS	24F512T		10-1N4148-ABX
D202	266885	DIODE 1N4148 (SWITCHING)	ELECTRICAL COMPONENTS	27V512T		10-1N4148-ABX
D203	266885	DIODE 1N4148 (SWITCHING)	ELECTRICAL COMPONENTS	27F520T		10-1N4148-ABX
D203	266885	DIODE 1N4148 (SWITCHING)	ELECTRICAL COMPONENTS	27V513T		10-1N4148-ABX
D203	266885	DIODE 1N4148 (SWITCHING)	ELECTRICAL COMPONENTS	27V520T		10-1N4148-ABX
D203	266885	DIODE 1N4148 (SWITCHING)	ELECTRICAL COMPONENTS	27F630T		10-1N4148-ABX
D203	266885	DIODE 1N4148 (SWITCHING)	ELECTRICAL COMPONENTS	24F512T		10-1N4148-ABX
D203	266885	DIODE 1N4148 (SWITCHING)	ELECTRICAL COMPONENTS	24V511T		10-1N4148-ABX
D203	266885	DIODE 1N4148 (SWITCHING)	ELECTRICAL COMPONENTS	27V512T		10-1N4148-ABX
D204	266885	DIODE 1N4148 (SWITCHING)	ELECTRICAL COMPONENTS	27F630T		10-1N4148-ABX
D204	266885	DIODE 1N4148 (SWITCHING)	ELECTRICAL COMPONENTS	27F520T		10-1N4148-ABX
D204	266885	DIODE 1N4148 (SWITCHING)	ELECTRICAL COMPONENTS	24V511T		10-1N4148-ABX
D204	266885	DIODE 1N4148 (SWITCHING)	ELECTRICAL COMPONENTS	27V512T		10-1N4148-ABX
D204	266885	DIODE 1N4148 (SWITCHING)	ELECTRICAL COMPONENTS	27V520T		10-1N4148-ABX
D204	266885	DIODE 1N4148 (SWITCHING)	ELECTRICAL COMPONENTS	24F512T		10-1N4148-ABX
D204	266885	DIODE 1N4148 (SWITCHING)	ELECTRICAL COMPONENTS	27V513T		10-1N4148-ABX
D205	266885	DIODE 1N4148 (SWITCHING)	ELECTRICAL COMPONENTS	24V511T		10-1N4148-ABX
D205	266885	DIODE 1N4148 (SWITCHING)	ELECTRICAL COMPONENTS	27V512T		10-1N4148-ABX
D205	266885	DIODE 1N4148 (SWITCHING)	ELECTRICAL COMPONENTS	27V513T		10-1N4148-ABX
D205	266885	DIODE 1N4148 (SWITCHING)	ELECTRICAL COMPONENTS	27V520T		10-1N4148-ABX
D205	266885	DIODE 1N4148 (SWITCHING)	ELECTRICAL COMPONENTS	24F512T		10-1N4148-ABX
D205	266885	DIODE 1N4148 (SWITCHING)	ELECTRICAL COMPONENTS	27F520T		10-1N4148-ABX
D205	266885	DIODE 1N4148 (SWITCHING)	ELECTRICAL COMPONENTS	27F630T		10-1N4148-ABX
D206	266885	DIODE 1N4148 (SWITCHING)	ELECTRICAL COMPONENTS	27F520T		10-1N4148-ABX
D206	266885	DIODE 1N4148 (SWITCHING)	ELECTRICAL COMPONENTS	27F630T		10-1N4148-ABX
D206	266885	DIODE 1N4148 (SWITCHING)	ELECTRICAL COMPONENTS	27V513T		10-1N4148-ABX
D206	266885	DIODE 1N4148 (SWITCHING)	ELECTRICAL COMPONENTS	24F512T		10-1N4148-ABX

Symbol	Stock	Description	Circuit	Model	TypeCode	Drawing
D206	266885	DIODE 1N4148 (SWITCHING)	ELECTRICAL COMPONENTS	27V512T		10-1N4148-ABX
D206	266885	DIODE 1N4148 (SWITCHING)	ELECTRICAL COMPONENTS	24V511T		10-1N4148-ABX
D206	266885	DIODE 1N4148 (SWITCHING)	ELECTRICAL COMPONENTS	27V520T		10-1N4148-ABX
D208	266885	DIODE 1N4148 (SWITCHING)	ELECTRICAL COMPONENTS	24V511T		10-1N4148-ABX
D208	266885	DIODE 1N4148 (SWITCHING)	ELECTRICAL COMPONENTS	27V512T		10-1N4148-ABX
D208	266885	DIODE 1N4148 (SWITCHING)	ELECTRICAL COMPONENTS	27V520T		10-1N4148-ABX
D208	266885	DIODE 1N4148 (SWITCHING)	ELECTRICAL COMPONENTS	24F512T		10-1N4148-ABX
D208	266885	DIODE 1N4148 (SWITCHING)	ELECTRICAL COMPONENTS	27F520T		10-1N4148-ABX
D208	266885	DIODE 1N4148 (SWITCHING)	ELECTRICAL COMPONENTS	27F630T		10-1N4148-ABX
D208	266885	DIODE 1N4148 (SWITCHING)	ELECTRICAL COMPONENTS	27V513T		10-1N4148-ABX
D209	268335	DIODE ZENER 2V4 1/2W 5%	ELECTRICAL COMPONENTS	24V511T		10-79C2V4-DBX
D209	268335	DIODE ZENER 2V4 1/2W 5%	ELECTRICAL COMPONENTS	27F520T		10-79C2V4-DBX
D209	268335	DIODE ZENER 2V4 1/2W 5%	ELECTRICAL COMPONENTS	27V520T		10-79C2V4-DBX
D209	268335	DIODE ZENER 2V4 1/2W 5%	ELECTRICAL COMPONENTS	27V512T		10-79C2V4-DBX
D209	268335	DIODE ZENER 2V4 1/2W 5%	ELECTRICAL COMPONENTS	24F512T		10-79C2V4-DBX
D209	268335	DIODE ZENER 2V4 1/2W 5%	ELECTRICAL COMPONENTS	27F630T		10-79C2V4-DBX
D209	268335	DIODE ZENER 2V4 1/2W 5%	ELECTRICAL COMPONENTS	27V513T		10-79C2V4-DBX
D210	268336	DIODE ZENER 24V 1/2W 5%	ELECTRICAL COMPONENTS	27F520T		10-79C24V-DBX
D210	268336	DIODE ZENER 24V 1/2W 5%	ELECTRICAL COMPONENTS	27V520T		10-79C24V-DBX
D210	268336	DIODE ZENER 24V 1/2W 5%	ELECTRICAL COMPONENTS	27V512T		10-79C24V-DBX
D210	268336	DIODE ZENER 24V 1/2W 5%	ELECTRICAL COMPONENTS	24F512T		10-79C24V-DBX
D210	268336	DIODE ZENER 24V 1/2W 5%	ELECTRICAL COMPONENTS	24V511T		10-79C24V-DBX
D210	268336	DIODE ZENER 24V 1/2W 5%	ELECTRICAL COMPONENTS	27F630T		10-79C24V-DBX
D210	268336	DIODE ZENER 24V 1/2W 5%	ELECTRICAL COMPONENTS	27V513T		10-79C24V-DBX
D211	266885	DIODE 1N4148 (SWITCHING)	ELECTRICAL COMPONENTS	27V520T		10-1N4148-ABX
D211	266885	DIODE 1N4148 (SWITCHING)	ELECTRICAL COMPONENTS	24V511T		10-1N4148-ABX
D211	266885	DIODE 1N4148 (SWITCHING)	ELECTRICAL COMPONENTS	24F512T		10-1N4148-ABX
D211	266885	DIODE 1N4148 (SWITCHING)	ELECTRICAL COMPONENTS	27V512T		10-1N4148-ABX
D211	266885	DIODE 1N4148 (SWITCHING)	ELECTRICAL COMPONENTS	27F630T		10-1N4148-ABX
D211	266885	DIODE 1N4148 (SWITCHING)	ELECTRICAL COMPONENTS	27V513T		10-1N4148-ABX
D211	266885	DIODE 1N4148 (SWITCHING)	ELECTRICAL COMPONENTS	27F520T		10-1N4148-ABX
D212	266885	DIODE 1N4148 (SWITCHING)	ELECTRICAL COMPONENTS	24V511T		10-1N4148-ABX
D212	266885	DIODE 1N4148 (SWITCHING)	ELECTRICAL COMPONENTS	24F512T		10-1N4148-ABX
D212	266885	DIODE 1N4148 (SWITCHING)	ELECTRICAL COMPONENTS	27F520T		10-1N4148-ABX
D212	266885	DIODE 1N4148 (SWITCHING)	ELECTRICAL COMPONENTS	27V520T		10-1N4148-ABX
D212	266885	DIODE 1N4148 (SWITCHING)	ELECTRICAL COMPONENTS	27V513T		10-1N4148-ABX
D212	266885	DIODE 1N4148 (SWITCHING)	ELECTRICAL COMPONENTS	27F630T		10-1N4148-ABX
D212	266885	DIODE 1N4148 (SWITCHING)	ELECTRICAL COMPONENTS	27V512T		10-1N4148-ABX
D213	266888	DIODE ZENER 3V9 1/2W 5%	ELECTRICAL COMPONENTS	27F520T		10-79C3V9-DBX
D213	266888	DIODE ZENER 3V9 1/2W 5%	ELECTRICAL COMPONENTS	27F630T		10-79C3V9-DBX
D213	266888	DIODE ZENER 3V9 1/2W 5%	ELECTRICAL COMPONENTS	27V512T		10-79C3V9-DBX
D213	266888	DIODE ZENER 3V9 1/2W 5%	ELECTRICAL COMPONENTS	27V520T		10-79C3V9-DBX
D213	266888	DIODE ZENER 3V9 1/2W 5%	ELECTRICAL COMPONENTS	27V513T		10-79C3V9-DBX
D213	266888	DIODE ZENER 3V9 1/2W 5%	ELECTRICAL COMPONENTS	24F512T		10-79C3V9-DBX
D213	266888	DIODE ZENER 3V9 1/2W 5%	ELECTRICAL COMPONENTS	24V511T		10-79C3V9-DBX
D214	266885	DIODE 1N4148 (SWITCHING)	ELECTRICAL COMPONENTS	27F520T		10-1N4148-ABX
D214	266885	DIODE 1N4148 (SWITCHING)	ELECTRICAL COMPONENTS	27V520T		10-1N4148-ABX
D214	266885	DIODE 1N4148 (SWITCHING)	ELECTRICAL COMPONENTS	24F512T		10-1N4148-ABX
D214	266885	DIODE 1N4148 (SWITCHING)	ELECTRICAL COMPONENTS	27V513T		10-1N4148-ABX
D214	266885	DIODE 1N4148 (SWITCHING)	ELECTRICAL COMPONENTS	27F630T		10-1N4148-ABX
D214	266885	DIODE 1N4148 (SWITCHING)	ELECTRICAL COMPONENTS	24V511T		10-1N4148-ABX
D214	266885	DIODE 1N4148 (SWITCHING)	ELECTRICAL COMPONENTS	27V512T		10-1N4148-ABX
D215	266885	DIODE 1N4148 (SWITCHING)	ELECTRICAL COMPONENTS	24V511T		10-1N4148-ABX
D215	266885	DIODE 1N4148 (SWITCHING)	ELECTRICAL COMPONENTS	27V520T		10-1N4148-ABX
D215	266885	DIODE 1N4148 (SWITCHING)	ELECTRICAL COMPONENTS	27V512T		10-1N4148-ABX
D215	266885	DIODE 1N4148 (SWITCHING)	ELECTRICAL COMPONENTS	27F630T		10-1N4148-ABX
D215	266885	DIODE 1N4148 (SWITCHING)	ELECTRICAL COMPONENTS	24F512T		10-1N4148-ABX
D215	266885	DIODE 1N4148 (SWITCHING)	ELECTRICAL COMPONENTS	27V513T		10-1N4148-ABX
D215	266885	DIODE 1N4148 (SWITCHING)	ELECTRICAL COMPONENTS	27F520T		10-1N4148-ABX
D262	266885	DIODE 1N4148 (SWITCHING)	ELECTRICAL COMPONENTS	24F512T		10-1N4148-ABX

Symbol	Stock	Description	Circuit	Model	TypeCode	Drawing
D262	266885	DIODE 1N4148 (SWITCHING)	ELECTRICAL COMPONENTS	27V520T		10-1N4148-ABX
D262	266885	DIODE 1N4148 (SWITCHING)	ELECTRICAL COMPONENTS	27V512T		10-1N4148-ABX
D262	266885	DIODE 1N4148 (SWITCHING)	ELECTRICAL COMPONENTS	27F520T		10-1N4148-ABX
D262	266885	DIODE 1N4148 (SWITCHING)	ELECTRICAL COMPONENTS	24V511T		10-1N4148-ABX
D262	266885	DIODE 1N4148 (SWITCHING)	ELECTRICAL COMPONENTS	27V513T		10-1N4148-ABX
D262	266885	DIODE 1N4148 (SWITCHING)	ELECTRICAL COMPONENTS	27F630T		10-1N4148-ABX
D301	266883	DIODE 1N4001 (RECTIFIER)	ELECTRICAL COMPONENTS	24F512T		10-1N4001-EBX
D301	266883	DIODE 1N4001 (RECTIFIER)	ELECTRICAL COMPONENTS	27F630T		10-1N4001-EBX
D301	266883	DIODE 1N4001 (RECTIFIER)	ELECTRICAL COMPONENTS	27V512T		10-1N4001-EBX
D301	266883	DIODE 1N4001 (RECTIFIER)	ELECTRICAL COMPONENTS	24V511T		10-1N4001-EBX
D301	266883	DIODE 1N4001 (RECTIFIER)	ELECTRICAL COMPONENTS	27V513T		10-1N4001-EBX
D301	266883	DIODE 1N4001 (RECTIFIER)	ELECTRICAL COMPONENTS	27V520T		10-1N4001-EBX
D301	266883	DIODE 1N4001 (RECTIFIER)	ELECTRICAL COMPONENTS	27F520T		10-1N4001-EBX
D303	266891	DIODE ZENER 8V2 1/2W 5%	ELECTRICAL COMPONENTS	24V511T		10-79C8V2-DBX
D303	266891	DIODE ZENER 8V2 1/2W 5%	ELECTRICAL COMPONENTS	27V513T		10-79C8V2-DBX
D303	266891	DIODE ZENER 8V2 1/2W 5%	ELECTRICAL COMPONENTS	24F512T		10-79C8V2-DBX
D303	266891	DIODE ZENER 8V2 1/2W 5%	ELECTRICAL COMPONENTS	27V512T		10-79C8V2-DBX
D303	266891	DIODE ZENER 8V2 1/2W 5%	ELECTRICAL COMPONENTS	27V520T		10-79C8V2-DBX
D303	266891	DIODE ZENER 8V2 1/2W 5%	ELECTRICAL COMPONENTS	27F520T		10-79C8V2-DBX
D303	266891	DIODE ZENER 8V2 1/2W 5%	ELECTRICAL COMPONENTS	27F630T		10-79C8V2-DBX
D304	266880	DIODE FR104 (FAST RECTIFIER)	ELECTRICAL COMPONENTS	27F630T		10-0FR104-FBX
D304	266880	DIODE FR104 (FAST RECTIFIER)	ELECTRICAL COMPONENTS	27V512T		10-0FR104-FBX
D304	266880	DIODE FR104 (FAST RECTIFIER)	ELECTRICAL COMPONENTS	24F512T		10-0FR104-FBX
D304	266880	DIODE FR104 (FAST RECTIFIER)	ELECTRICAL COMPONENTS	24V511T		10-0FR104-FBX
D304	266880	DIODE FR104 (FAST RECTIFIER)	ELECTRICAL COMPONENTS	27F520T		10-0FR104-FBX
D304	266880	DIODE FR104 (FAST RECTIFIER)	ELECTRICAL COMPONENTS	27V513T		10-0FR104-FBX
D304	266880	DIODE FR104 (FAST RECTIFIER)	ELECTRICAL COMPONENTS	27V520T		10-0FR104-FBX
D309	268337	ZENER DIODE BZV85-C51 1.3W-51V	ELECTRICAL COMPONENTS	27F630T		10-85C51V-DBX
D309	268337	ZENER DIODE BZV85-C51 1.3W-51V	ELECTRICAL COMPONENTS	27V513T		10-85C51V-DBX
D309	268337	ZENER DIODE BZV85-C51 1.3W-51V	ELECTRICAL COMPONENTS	27V520T		10-85C51V-DBX
D309	268337	ZENER DIODE BZV85-C51 1.3W-51V	ELECTRICAL COMPONENTS	27V512T		10-85C51V-DBX
D309	268337	ZENER DIODE BZV85-C51 1.3W-51V	ELECTRICAL COMPONENTS	27F520T		10-85C51V-DBX
D309	268337	ZENER DIODE BZV85-C51 1.3W-51V	ELECTRICAL COMPONENTS	24V511T		10-85C51V-DBX
D309	268337	ZENER DIODE BZV85-C51 1.3W-51V	ELECTRICAL COMPONENTS	24F512T		10-85C51V-DBX
D310	266885	DIODE 1N4148 (SWITCHING)	ELECTRICAL COMPONENTS	24F512T		10-1N4148-ABX
D310	266885	DIODE 1N4148 (SWITCHING)	ELECTRICAL COMPONENTS	24V511T		10-1N4148-ABX
D310	266885	DIODE 1N4148 (SWITCHING)	ELECTRICAL COMPONENTS	27V512T		10-1N4148-ABX
D310	266885	DIODE 1N4148 (SWITCHING)	ELECTRICAL COMPONENTS	27V513T		10-1N4148-ABX
D310	266885	DIODE 1N4148 (SWITCHING)	ELECTRICAL COMPONENTS	27F630T		10-1N4148-ABX
D310	266885	DIODE 1N4148 (SWITCHING)	ELECTRICAL COMPONENTS	27F520T		10-1N4148-ABX
D310	266885	DIODE 1N4148 (SWITCHING)	ELECTRICAL COMPONENTS	27V520T		10-1N4148-ABX
D410	266885	DIODE 1N4148 (SWITCHING)	ELECTRICAL COMPONENTS	24V511T		10-1N4148-ABX
D410	266885	DIODE 1N4148 (SWITCHING)	ELECTRICAL COMPONENTS	27V512T		10-1N4148-ABX
D410	266885	DIODE 1N4148 (SWITCHING)	ELECTRICAL COMPONENTS	27F520T		10-1N4148-ABX
D410	266885	DIODE 1N4148 (SWITCHING)	ELECTRICAL COMPONENTS	27V520T		10-1N4148-ABX
D410	266885	DIODE 1N4148 (SWITCHING)	ELECTRICAL COMPONENTS	27V513T		10-1N4148-ABX
D410	266885	DIODE 1N4148 (SWITCHING)	ELECTRICAL COMPONENTS	24F512T		10-1N4148-ABX
D410	266885	DIODE 1N4148 (SWITCHING)	ELECTRICAL COMPONENTS	27F630T		10-1N4148-ABX
D411	266879	DIODE BY228	ELECTRICAL COMPONENTS	27F630T		10-0BY228-F0X
D411	266879	DIODE BY228	ELECTRICAL COMPONENTS	24V511T		10-0BY228-F0X
D411	266879	DIODE BY228	ELECTRICAL COMPONENTS	27V512T		10-0BY228-F0X
D411	266879	DIODE BY228	ELECTRICAL COMPONENTS	27V520T		10-0BY228-F0X
D411	266879	DIODE BY228	ELECTRICAL COMPONENTS	27V513T		10-0BY228-F0X
D411	266879	DIODE BY228	ELECTRICAL COMPONENTS	27F520T		10-0BY228-F0X
D411	266879	DIODE BY228	ELECTRICAL COMPONENTS	24F512T		10-0BY228-F0X
D412	266880	DIODE FR104 (FAST RECTIFIER)	ELECTRICAL COMPONENTS	27F520T		10-0FR104-FBX
D412	266880	DIODE FR104 (FAST RECTIFIER)	ELECTRICAL COMPONENTS	24V511T		10-0FR104-FBX
D412	266880	DIODE FR104 (FAST RECTIFIER)	ELECTRICAL COMPONENTS	27V512T		10-0FR104-FBX
D412	266880	DIODE FR104 (FAST RECTIFIER)	ELECTRICAL COMPONENTS	27V513T		10-0FR104-FBX
D412	266880	DIODE FR104 (FAST RECTIFIER)	ELECTRICAL COMPONENTS	27F630T		10-0FR104-FBX

Symbol	Stock	Description	Circuit	Model	TypeCode	Drawing
D412	266880	DIODE FR104 (FAST RECTIFIER)	ELECTRICAL COMPONENTS	24F512T		10-0FR104-FBX
D412	266880	DIODE FR104 (FAST RECTIFIER)	ELECTRICAL COMPONENTS	27V520T		10-0FR104-FBX
D420	266883	DIODE 1N4001 (RECTIFIER)	ELECTRICAL COMPONENTS	27F520T		10-1N4001-EBX
D420	266883	DIODE 1N4001 (RECTIFIER)	ELECTRICAL COMPONENTS	27V520T		10-1N4001-EBX
D420	266883	DIODE 1N4001 (RECTIFIER)	ELECTRICAL COMPONENTS	27F630T		10-1N4001-EBX
D420	266883	DIODE 1N4001 (RECTIFIER)	ELECTRICAL COMPONENTS	24V511T		10-1N4001-EBX
D420	266883	DIODE 1N4001 (RECTIFIER)	ELECTRICAL COMPONENTS	24F512T		10-1N4001-EBX
D420	266883	DIODE 1N4001 (RECTIFIER)	ELECTRICAL COMPONENTS	27V512T		10-1N4001-EBX
D420	266883	DIODE 1N4001 (RECTIFIER)	ELECTRICAL COMPONENTS	27V513T		10-1N4001-EBX
D431	266880	DIODE FR104 (FAST RECTIFIER)	ELECTRICAL COMPONENTS	24V511T		10-0FR104-FBX
D431	266880	DIODE FR104 (FAST RECTIFIER)	ELECTRICAL COMPONENTS	27V513T		10-0FR104-FBX
D431	266880	DIODE FR104 (FAST RECTIFIER)	ELECTRICAL COMPONENTS	27V520T		10-0FR104-FBX
D431	266880	DIODE FR104 (FAST RECTIFIER)	ELECTRICAL COMPONENTS	27V512T		10-0FR104-FBX
D431	266880	DIODE FR104 (FAST RECTIFIER)	ELECTRICAL COMPONENTS	24F512T		10-0FR104-FBX
D431	266880	DIODE FR104 (FAST RECTIFIER)	ELECTRICAL COMPONENTS	27F520T		10-0FR104-FBX
D431	266880	DIODE FR104 (FAST RECTIFIER)	ELECTRICAL COMPONENTS	27F630T		10-0FR104-FBX
D432	266880	DIODE FR104 (FAST RECTIFIER)	ELECTRICAL COMPONENTS	27V512T		10-0FR104-FBX
D432	266880	DIODE FR104 (FAST RECTIFIER)	ELECTRICAL COMPONENTS	24F512T		10-0FR104-FBX
D432	266880	DIODE FR104 (FAST RECTIFIER)	ELECTRICAL COMPONENTS	27F520T		10-0FR104-FBX
D432	266880	DIODE FR104 (FAST RECTIFIER)	ELECTRICAL COMPONENTS	24V511T		10-0FR104-FBX
D432	266880	DIODE FR104 (FAST RECTIFIER)	ELECTRICAL COMPONENTS	27F630T		10-0FR104-FBX
D432	266880	DIODE FR104 (FAST RECTIFIER)	ELECTRICAL COMPONENTS	27V513T		10-0FR104-FBX
D432	266880	DIODE FR104 (FAST RECTIFIER)	ELECTRICAL COMPONENTS	27V520T		10-0FR104-FBX
D441	266880	DIODE FR104 (FAST RECTIFIER)	ELECTRICAL COMPONENTS	27F520T		10-0FR104-FBX
D441	266880	DIODE FR104 (FAST RECTIFIER)	ELECTRICAL COMPONENTS	27F630T		10-0FR104-FBX
D441	266880	DIODE FR104 (FAST RECTIFIER)	ELECTRICAL COMPONENTS	24V511T		10-0FR104-FBX
D441	266880	DIODE FR104 (FAST RECTIFIER)	ELECTRICAL COMPONENTS	24F512T		10-0FR104-FBX
D441	266880	DIODE FR104 (FAST RECTIFIER)	ELECTRICAL COMPONENTS	27V520T		10-0FR104-FBX
D441	266880	DIODE FR104 (FAST RECTIFIER)	ELECTRICAL COMPONENTS	27V513T		10-0FR104-FBX
D441	266880	DIODE FR104 (FAST RECTIFIER)	ELECTRICAL COMPONENTS	27V512T		10-0FR104-FBX
D501	266885	DIODE 1N4148 (SWITCHING)	ELECTRICAL COMPONENTS	27V512T		10-1N4148-ABX
D501	266885	DIODE 1N4148 (SWITCHING)	ELECTRICAL COMPONENTS	27V520T		10-1N4148-ABX
D501	266885	DIODE 1N4148 (SWITCHING)	ELECTRICAL COMPONENTS	24V511T		10-1N4148-ABX
D501	266885	DIODE 1N4148 (SWITCHING)	ELECTRICAL COMPONENTS	27V513T		10-1N4148-ABX
D501	266885	DIODE 1N4148 (SWITCHING)	ELECTRICAL COMPONENTS	27F520T		10-1N4148-ABX
D501	266885	DIODE 1N4148 (SWITCHING)	ELECTRICAL COMPONENTS	24F512T		10-1N4148-ABX
D501	266885	DIODE 1N4148 (SWITCHING)	ELECTRICAL COMPONENTS	27F630T		10-1N4148-ABX
D502	266885	DIODE 1N4148 (SWITCHING)	ELECTRICAL COMPONENTS	27V512T		10-1N4148-ABX
D502	266885	DIODE 1N4148 (SWITCHING)	ELECTRICAL COMPONENTS	27V520T		10-1N4148-ABX
D502	266885	DIODE 1N4148 (SWITCHING)	ELECTRICAL COMPONENTS	24V511T		10-1N4148-ABX
D502	266885	DIODE 1N4148 (SWITCHING)	ELECTRICAL COMPONENTS	24F512T		10-1N4148-ABX
D502	266885	DIODE 1N4148 (SWITCHING)	ELECTRICAL COMPONENTS	27F630T		10-1N4148-ABX
D502	266885	DIODE 1N4148 (SWITCHING)	ELECTRICAL COMPONENTS	27V513T		10-1N4148-ABX
D502	266885	DIODE 1N4148 (SWITCHING)	ELECTRICAL COMPONENTS	27F520T		10-1N4148-ABX
D602	266885	DIODE 1N4148 (SWITCHING)	ELECTRICAL COMPONENTS	27V512T		10-1N4148-ABX
D602	266885	DIODE 1N4148 (SWITCHING)	ELECTRICAL COMPONENTS	27F630T		10-1N4148-ABX
D602	266885	DIODE 1N4148 (SWITCHING)	ELECTRICAL COMPONENTS	24V511T		10-1N4148-ABX
D602	266885	DIODE 1N4148 (SWITCHING)	ELECTRICAL COMPONENTS	24F512T		10-1N4148-ABX
D602	266885	DIODE 1N4148 (SWITCHING)	ELECTRICAL COMPONENTS	27V520T		10-1N4148-ABX
D602	266885	DIODE 1N4148 (SWITCHING)	ELECTRICAL COMPONENTS	27F520T		10-1N4148-ABX
D602	266885	DIODE 1N4148 (SWITCHING)	ELECTRICAL COMPONENTS	27V513T		10-1N4148-ABX
D810	266880	DIODE FR104 (FAST RECTIFIER)	ELECTRICAL COMPONENTS	24F512T		10-0FR104-FBX
D810	266880	DIODE FR104 (FAST RECTIFIER)	ELECTRICAL COMPONENTS	27F520T		10-0FR104-FBX
D810	266880	DIODE FR104 (FAST RECTIFIER)	ELECTRICAL COMPONENTS	27V512T		10-0FR104-FBX
D810	266880	DIODE FR104 (FAST RECTIFIER)	ELECTRICAL COMPONENTS	27F630T		10-0FR104-FBX
D810	266880	DIODE FR104 (FAST RECTIFIER)	ELECTRICAL COMPONENTS	27V520T		10-0FR104-FBX
D810	266880	DIODE FR104 (FAST RECTIFIER)	ELECTRICAL COMPONENTS	27V513T		10-0FR104-FBX
D810	266880	DIODE FR104 (FAST RECTIFIER)	ELECTRICAL COMPONENTS	24V511T		10-0FR104-FBX
D811	266880	DIODE FR104 (FAST RECTIFIER)	ELECTRICAL COMPONENTS	27V513T		10-0FR104-FBX
D811	266880	DIODE FR104 (FAST RECTIFIER)	ELECTRICAL COMPONENTS	24F512T		10-0FR104-FBX

Symbol	Stock	Description	Circuit	Model	TypeCode	Drawing
D811	266880	DIODE FR104 (FAST RECTIFIER)	ELECTRICAL COMPONENTS	27V520T		10-0FR104-FBX
D811	266880	DIODE FR104 (FAST RECTIFIER)	ELECTRICAL COMPONENTS	27F630T		10-0FR104-FBX
D811	266880	DIODE FR104 (FAST RECTIFIER)	ELECTRICAL COMPONENTS	24V511T		10-0FR104-FBX
D811	266880	DIODE FR104 (FAST RECTIFIER)	ELECTRICAL COMPONENTS	27F520T		10-0FR104-FBX
D811	266880	DIODE FR104 (FAST RECTIFIER)	ELECTRICAL COMPONENTS	27V512T		10-0FR104-FBX
D812	266885	DIODE 1N4148 (SWITCHING)	ELECTRICAL COMPONENTS	27V513T		10-1N4148-ABX
D812	266885	DIODE 1N4148 (SWITCHING)	ELECTRICAL COMPONENTS	27F630T		10-1N4148-ABX
D812	266885	DIODE 1N4148 (SWITCHING)	ELECTRICAL COMPONENTS	24F512T		10-1N4148-ABX
D812	266885	DIODE 1N4148 (SWITCHING)	ELECTRICAL COMPONENTS	27V512T		10-1N4148-ABX
D812	266885	DIODE 1N4148 (SWITCHING)	ELECTRICAL COMPONENTS	27F520T		10-1N4148-ABX
D812	266885	DIODE 1N4148 (SWITCHING)	ELECTRICAL COMPONENTS	27V520T		10-1N4148-ABX
D812	266885	DIODE 1N4148 (SWITCHING)	ELECTRICAL COMPONENTS	24V511T		10-1N4148-ABX
D813	266890	DIODE ZENER 6V2 1/2W 5%	ELECTRICAL COMPONENTS	27F520T		10-79C6V2-DBX
D813	266890	DIODE ZENER 6V2 1/2W 5%	ELECTRICAL COMPONENTS	24F512T		10-79C6V2-DBX
D813	266890	DIODE ZENER 6V2 1/2W 5%	ELECTRICAL COMPONENTS	27F630T		10-79C6V2-DBX
D813	266890	DIODE ZENER 6V2 1/2W 5%	ELECTRICAL COMPONENTS	27V512T		10-79C6V2-DBX
D813	266890	DIODE ZENER 6V2 1/2W 5%	ELECTRICAL COMPONENTS	27V513T		10-79C6V2-DBX
D813	266890	DIODE ZENER 6V2 1/2W 5%	ELECTRICAL COMPONENTS	27V520T		10-79C6V2-DBX
D813	266890	DIODE ZENER 6V2 1/2W 5%	ELECTRICAL COMPONENTS	24V511T		10-79C6V2-DBX
D820	268338	DIODE RU4YX (FAST RECOVERY)	ELECTRICAL COMPONENTS	24F512T		10-0RU4YX-F0X
D820	268338	DIODE RU4YX (FAST RECOVERY)	ELECTRICAL COMPONENTS	27V513T		10-0RU4YX-F0X
D820	268338	DIODE RU4YX (FAST RECOVERY)	ELECTRICAL COMPONENTS	27F630T		10-0RU4YX-F0X
D820	268338	DIODE RU4YX (FAST RECOVERY)	ELECTRICAL COMPONENTS	24V511T		10-0RU4YX-F0X
D820	268338	DIODE RU4YX (FAST RECOVERY)	ELECTRICAL COMPONENTS	27V512T		10-0RU4YX-F0X
D820	268338	DIODE RU4YX (FAST RECOVERY)	ELECTRICAL COMPONENTS	27F520T		10-0RU4YX-F0X
D820	268338	DIODE RU4YX (FAST RECOVERY)	ELECTRICAL COMPONENTS	27V520T		10-0RU4YX-F0X
D822	268339	DIODE RU4AM (FAST RECOVERY)	ELECTRICAL COMPONENTS	24F512T		10-0RU4AM-F0X
D822	268339	DIODE RU4AM (FAST RECOVERY)	ELECTRICAL COMPONENTS	27F520T		10-0RU4AM-F0X
D822	268339	DIODE RU4AM (FAST RECOVERY)	ELECTRICAL COMPONENTS	24V511T		10-0RU4AM-F0X
D822	268339	DIODE RU4AM (FAST RECOVERY)	ELECTRICAL COMPONENTS	27F630T		10-0RU4AM-F0X
D822	268339	DIODE RU4AM (FAST RECOVERY)	ELECTRICAL COMPONENTS	27V512T		10-0RU4AM-F0X
D822	268339	DIODE RU4AM (FAST RECOVERY)	ELECTRICAL COMPONENTS	27V513T		10-0RU4AM-F0X
D822	268339	DIODE RU4AM (FAST RECOVERY)	ELECTRICAL COMPONENTS	27V520T		10-0RU4AM-F0X
D823	268338	DIODE RU4YX (FAST RECOVERY)	ELECTRICAL COMPONENTS	24V511T		10-0RU4YX-F0X
D823	268338	DIODE RU4YX (FAST RECOVERY)	ELECTRICAL COMPONENTS	27F520T		10-0RU4YX-F0X
D823	268338	DIODE RU4YX (FAST RECOVERY)	ELECTRICAL COMPONENTS	24F512T		10-0RU4YX-F0X
D823	268338	DIODE RU4YX (FAST RECOVERY)	ELECTRICAL COMPONENTS	27V520T		10-0RU4YX-F0X
D823	268338	DIODE RU4YX (FAST RECOVERY)	ELECTRICAL COMPONENTS	27V512T		10-0RU4YX-F0X
D823	268338	DIODE RU4YX (FAST RECOVERY)	ELECTRICAL COMPONENTS	27F630T		10-0RU4YX-F0X
D823	268338	DIODE RU4YX (FAST RECOVERY)	ELECTRICAL COMPONENTS	27V513T		10-0RU4YX-F0X
D824	266883	DIODE 1N4001 (RECTIFIER)	ELECTRICAL COMPONENTS	27F520T		10-1N4001-EBX
D824	266883	DIODE 1N4001 (RECTIFIER)	ELECTRICAL COMPONENTS	24F512T		10-1N4001-EBX
D824	266883	DIODE 1N4001 (RECTIFIER)	ELECTRICAL COMPONENTS	24V511T		10-1N4001-EBX
D824	266883	DIODE 1N4001 (RECTIFIER)	ELECTRICAL COMPONENTS	27V513T		10-1N4001-EBX
D824	266883	DIODE 1N4001 (RECTIFIER)	ELECTRICAL COMPONENTS	27V520T		10-1N4001-EBX
D824	266883	DIODE 1N4001 (RECTIFIER)	ELECTRICAL COMPONENTS	27V512T		10-1N4001-EBX
D824	266883	DIODE 1N4001 (RECTIFIER)	ELECTRICAL COMPONENTS	27F630T		10-1N4001-EBX
D826	266891	DIODE ZENER 8V2 1/2W 5%	ELECTRICAL COMPONENTS	27F520T		10-79C8V2-DBX
D826	266891	DIODE ZENER 8V2 1/2W 5%	ELECTRICAL COMPONENTS	27V512T		10-79C8V2-DBX
D826	266891	DIODE ZENER 8V2 1/2W 5%	ELECTRICAL COMPONENTS	27V513T		10-79C8V2-DBX
D826	266891	DIODE ZENER 8V2 1/2W 5%	ELECTRICAL COMPONENTS	24F512T		10-79C8V2-DBX
D826	266891	DIODE ZENER 8V2 1/2W 5%	ELECTRICAL COMPONENTS	27V520T		10-79C8V2-DBX
D826	266891	DIODE ZENER 8V2 1/2W 5%	ELECTRICAL COMPONENTS	27F630T		10-79C8V2-DBX
D826	266891	DIODE ZENER 8V2 1/2W 5%	ELECTRICAL COMPONENTS	24V511T		10-79C8V2-DBX
D827	266885	DIODE 1N4148 (SWITCHING)	ELECTRICAL COMPONENTS	24F512T		10-1N4148-ABX
D827	266885	DIODE 1N4148 (SWITCHING)	ELECTRICAL COMPONENTS	27F630T		10-1N4148-ABX
D827	266885	DIODE 1N4148 (SWITCHING)	ELECTRICAL COMPONENTS	27V513T		10-1N4148-ABX
D827	266885	DIODE 1N4148 (SWITCHING)	ELECTRICAL COMPONENTS	27V520T		10-1N4148-ABX
D827	266885	DIODE 1N4148 (SWITCHING)	ELECTRICAL COMPONENTS	24V511T		10-1N4148-ABX
D827	266885	DIODE 1N4148 (SWITCHING)	ELECTRICAL COMPONENTS	27F520T		10-1N4148-ABX

Symbol	Stock	Description	Circuit	Model	TypeCode	Drawing
D827	266885	DIODE 1N4148 (SWITCHING)	ELECTRICAL COMPONENTS	27V512T		10-1N4148-ABX
D828	266890	DIODE ZENER 6V2 1/2W 5%	ELECTRICAL COMPONENTS	27V520T		10-79C6V2-DBX
D828	266890	DIODE ZENER 6V2 1/2W 5%	ELECTRICAL COMPONENTS	24F512T		10-79C6V2-DBX
D828	266890	DIODE ZENER 6V2 1/2W 5%	ELECTRICAL COMPONENTS	27V513T		10-79C6V2-DBX
D828	266890	DIODE ZENER 6V2 1/2W 5%	ELECTRICAL COMPONENTS	27V512T		10-79C6V2-DBX
D828	266890	DIODE ZENER 6V2 1/2W 5%	ELECTRICAL COMPONENTS	27F520T		10-79C6V2-DBX
D828	266890	DIODE ZENER 6V2 1/2W 5%	ELECTRICAL COMPONENTS	24V511T		10-79C6V2-DBX
D828	266890	DIODE ZENER 6V2 1/2W 5%	ELECTRICAL COMPONENTS	27F630T		10-79C6V2-DBX
D829	266885	DIODE 1N4148 (SWITCHING)	ELECTRICAL COMPONENTS	27F630T		10-1N4148-ABX
D829	266885	DIODE 1N4148 (SWITCHING)	ELECTRICAL COMPONENTS	27F520T		10-1N4148-ABX
D829	266885	DIODE 1N4148 (SWITCHING)	ELECTRICAL COMPONENTS	27V513T		10-1N4148-ABX
D829	266885	DIODE 1N4148 (SWITCHING)	ELECTRICAL COMPONENTS	27V520T		10-1N4148-ABX
D829	266885	DIODE 1N4148 (SWITCHING)	ELECTRICAL COMPONENTS	27V512T		10-1N4148-ABX
D829	266885	DIODE 1N4148 (SWITCHING)	ELECTRICAL COMPONENTS	24F512T		10-1N4148-ABX
D829	266885	DIODE 1N4148 (SWITCHING)	ELECTRICAL COMPONENTS	24V511T		10-1N4148-ABX
D834	268340	DIODE ZENER 9V1 1/2W 5%	ELECTRICAL COMPONENTS	27F520T		10-79C9V1-DBX
D834	268340	DIODE ZENER 9V1 1/2W 5%	ELECTRICAL COMPONENTS	27V512T		10-79C9V1-DBX
D834	268340	DIODE ZENER 9V1 1/2W 5%	ELECTRICAL COMPONENTS	27V520T		10-79C9V1-DBX
D834	268340	DIODE ZENER 9V1 1/2W 5%	ELECTRICAL COMPONENTS	24F512T		10-79C9V1-DBX
D834	268340	DIODE ZENER 9V1 1/2W 5%	ELECTRICAL COMPONENTS	24V511T		10-79C9V1-DBX
D834	268340	DIODE ZENER 9V1 1/2W 5%	ELECTRICAL COMPONENTS	27F630T		10-79C9V1-DBX
D834	268340	DIODE ZENER 9V1 1/2W 5%	ELECTRICAL COMPONENTS	27V513T		10-79C9V1-DBX
DB801	268341	DIODE D3SB60 (BRIDGE RECT.)	ELECTRICAL COMPONENTS	27V513T	S	10-D3SB60-H7X
DB801	268341	DIODE D3SB60 (BRIDGE RECT.)	ELECTRICAL COMPONENTS	27V512T	S	10-D3SB60-H7X
DB801	268341	DIODE D3SB60 (BRIDGE RECT.)	ELECTRICAL COMPONENTS	27V520T	S	10-D3SB60-H7X
DB801	268341	DIODE D3SB60 (BRIDGE RECT.)	ELECTRICAL COMPONENTS	27F520T	S	10-D3SB60-H7X
DB801	268341	DIODE D3SB60 (BRIDGE RECT.)	ELECTRICAL COMPONENTS	24F512T	S	10-D3SB60-H7X
DB801	268341	DIODE D3SB60 (BRIDGE RECT.)	ELECTRICAL COMPONENTS	24V511T		10-D3SB60-H7X
DB801	268341	DIODE D3SB60 (BRIDGE RECT.)	ELECTRICAL COMPONENTS	27F630T	S	10-D3SB60-H7X
DEGAU	268431	DEGAUSSING COIL 3100MM	ELECTRICAL COMPONENTS	27F630T		36-DEG290-XX2
ENCLOSUR	268493	SPEAKER	INSTRUMENT	27F630T		25768460
F801	268342	GLASS TUBE FUSE	ELECTRICAL COMPONENTS	27F520T	S	50-05000D-1UT
F801	268342	GLASS TUBE FUSE	ELECTRICAL COMPONENTS	27V512T	S	50-05000D-1UT
F801	268342	GLASS TUBE FUSE	ELECTRICAL COMPONENTS	27V513T	S	50-05000D-1UT
F801	268342	GLASS TUBE FUSE	ELECTRICAL COMPONENTS	24F512T	S	50-05000D-1UT
F801	268342	GLASS TUBE FUSE	ELECTRICAL COMPONENTS	27V520T	S	50-05000D-1UT
F801	268342	GLASS TUBE FUSE	ELECTRICAL COMPONENTS	24V511T		50-05000D-1UT
F801	268342	GLASS TUBE FUSE	ELECTRICAL COMPONENTS	27F630T	S	50-05000D-1UT
FASTENER	258027	FASTENER, AC CABLE	INSTRUMENT	27F630T	S	2556925B
FASTENER	258027	FASTENER, AC CABLE	INSTRUMENT	27V520T	S	2556925B
FBT	268397	FBT BRACKET	ELECTRICAL COMPONENTS	27F630T		62-227680-1UA
FBT	268397	FBT BRACKET	ELECTRICAL COMPONENTS	27V520T		62-227680-1UA
FBT	268397	FBT BRACKET	ELECTRICAL COMPONENTS	27F520T		62-227680-1UA
FOOT	265439	FOOT	INSTRUMENT	27F630T		25130650
FOOT	265439	FOOT	INSTRUMENT	27F520T		25130650
FUSE	267064	FUSE HOLDER	ELECTRICAL COMPONENTS	27F520T		66-20516X-0B0
FUSE	267064	FUSE HOLDER	ELECTRICAL COMPONENTS	27V520T		66-20516X-0B0
FUSE	267064	FUSE HOLDER	ELECTRICAL COMPONENTS	27F630T		66-20516X-0B0
FUSE	267064	FUSE HOLDER	ELECTRICAL COMPONENTS	24V511T		66-20516X-0B0
FUSE	267064	FUSE HOLDER	ELECTRICAL COMPONENTS	24F512T		66-20516X-0B0
FUSE	267064	FUSE HOLDER	ELECTRICAL COMPONENTS	27V520T		66-20516X-0B0
G1	267021	CONNECTOR, 1 PIN	ELECTRICAL COMPONENTS	27V520T		46-10967W-01X
G1	267021	CONNECTOR, 1 PIN	ELECTRICAL COMPONENTS	27V513T		46-10967W-01X
G1	267021	CONNECTOR, 1 PIN	ELECTRICAL COMPONENTS	24F512T		46-10967W-01X
G1	267021	CONNECTOR, 1 PIN	ELECTRICAL COMPONENTS	27V512T		46-10967W-01X
G1	267021	CONNECTOR, 1 PIN	ELECTRICAL COMPONENTS	27F630T		46-10967W-01X
G1	267021	CONNECTOR, 1 PIN	ELECTRICAL COMPONENTS	27F520T		46-10967W-01X
G1	267021	CONNECTOR, 1 PIN	ELECTRICAL COMPONENTS	24V511T		46-10967W-01X
GUIDE	263490	LIGHT GUIDE, IR	INSTRUMENT	27F630T		25684380
HOLDER	267064	FUSE HOLDER	ELECTRICAL COMPONENTS	27V512T		66-20516X-0B0

Symbol	Stock	Description	Circuit	Model	TypeCode	Drawing
HOLDER	268447	LED HOLDER ABS-LG H121 (HB)	INSTRUMENT	24V511T		62-226920-0HA
HOLDER	267064	FUSE HOLDER	ELECTRICAL COMPONENTS	27V513T		66-20516X-0B0
HS	268395	HS 2P22 600/7 TJC3-2Y	ELECTRICAL COMPONENTS	27V520T		46-27580H-02X
HS	268394	HS 4P A/B 500/13 RBGW TJC1-4Y	ELECTRICAL COMPONENTS	27F520T		46-26514H-04X
HS	268395	HS 2P22 600/7 TJC3-2Y	ELECTRICAL COMPONENTS	27F520T		46-27580H-02X
HS	268395	HS 2P22 600/7 TJC3-2Y	ELECTRICAL COMPONENTS	27F520T		46-27580H-02X
HS	268394	HS 4P A/B 500/13 RBGW TJC1-4Y	ELECTRICAL COMPONENTS	27F630T		46-26514H-04X
HS	268395	HS 2P22 600/7 TJC3-2Y	ELECTRICAL COMPONENTS	27F630T		46-27580H-02X
HS	268394	HS 4P A/B 500/13 RBGW TJC1-4Y	ELECTRICAL COMPONENTS	27V520T		46-26514H-04X
HS	268426	HS 4P 1185#26/1007#24 650MM TJ	ELECTRICAL COMPONENTS	24V511T		46-CD065F-04001
HS	268395	HS 2P22 600/7 TJC3-2Y	ELECTRICAL COMPONENTS	27V520T		46-27580H-02X
IC001	266906	IC EEPROM 8K M24C08 (WRITE)	ELECTRICAL COMPONENTS	27V512T		13-00M24C-08P
IC001	266906	IC EEPROM 8K M24C08 (WRITE)	ELECTRICAL COMPONENTS	27V513T		13-00M24C-08P
IC001	266906	IC EEPROM 8K M24C08 (WRITE)	ELECTRICAL COMPONENTS	24F512T		13-00M24C-08P
IC001	266906	IC EEPROM 8K M24C08 (WRITE)	ELECTRICAL COMPONENTS	27F630T		13-00M24C-08P
IC001	266906	IC EEPROM 8K M24C08 (WRITE)	ELECTRICAL COMPONENTS	27V520T		13-00M24C-08P
IC001	266906	IC EEPROM 8K M24C08 (WRITE)	ELECTRICAL COMPONENTS	24V511T		13-00M24C-08P
IC001	266906	IC EEPROM 8K M24C08 (WRITE)	ELECTRICAL COMPONENTS	27F520T		13-00M24C-08P
IC1001	268343	IC MSP 3425G	ELECTRICAL COMPONENTS	24F512T		13-MSP342-5GB
IC1001	268343	IC MSP 3425G	ELECTRICAL COMPONENTS	27V520T		13-MSP342-5GB
IC1001	268343	IC MSP 3425G	ELECTRICAL COMPONENTS	27F520T		13-MSP342-5GB
IC1001	268343	IC MSP 3425G	ELECTRICAL COMPONENTS	27V513T		13-MSP342-5GB
IC1001	268343	IC MSP 3425G	ELECTRICAL COMPONENTS	27V512T		13-MSP342-5GB
IC1001	268343	IC MSP 3425G	ELECTRICAL COMPONENTS	24V511T		13-MSP342-5GB
IC1001	268343	IC MSP 3425G	ELECTRICAL COMPONENTS	27F630T		13-MSP342-5GB
IC101	268344	IC TMPA8859CSNG	ELECTRICAL COMPONENTS	27F630T		13-A27V01-TOP
IC101	268344	IC TMPA8859CSNG	ELECTRICAL COMPONENTS	27V513T		13-A27V01-TOP
IC101	268344	IC TMPA8859CSNG	ELECTRICAL COMPONENTS	27V512T		13-A27V01-TOP
IC101	268344	IC TMPA8859CSNG	ELECTRICAL COMPONENTS	24F512T		13-A27V01-TOP
IC101	268344	IC TMPA8859CSNG	ELECTRICAL COMPONENTS	24V511T		13-A27V01-TOP
IC101	268344	IC TMPA8859CSNG	ELECTRICAL COMPONENTS	27V520T		13-A27V01-TOP
IC101	268344	IC TMPA8859CSNG	ELECTRICAL COMPONENTS	27F520T		13-A27V01-TOP
IC1201	268345	IC TC90A49P	ELECTRICAL COMPONENTS	27V520T		13-TC90A4-90P
IC1201	268345	IC TC90A49P	ELECTRICAL COMPONENTS	27F630T		13-TC90A4-90P
IC1201	268345	IC TC90A49P	ELECTRICAL COMPONENTS	27F520T		13-TC90A4-90P
IC201	266912	IC L7809CV	ELECTRICAL COMPONENTS	24V511T		13-L7809C-VAP
IC201	266912	IC L7809CV	ELECTRICAL COMPONENTS	27V512T		13-L7809C-VAP
IC201	266912	IC L7809CV	ELECTRICAL COMPONENTS	24F512T		13-L7809C-VAP
IC201	266912	IC L7809CV	ELECTRICAL COMPONENTS	27F520T		13-L7809C-VAP
IC201	266912	IC L7809CV	ELECTRICAL COMPONENTS	27V513T		13-L7809C-VAP
IC201	266912	IC L7809CV	ELECTRICAL COMPONENTS	27V520T		13-L7809C-VAP
IC201	266912	IC L7809CV	ELECTRICAL COMPONENTS	27F630T		13-L7809C-VAP
IC202	266911	IC L7805CV 1.5A (REGULATOR)	ELECTRICAL COMPONENTS	24F512T		13-L7805C-VAP
IC202	266911	IC L7805CV 1.5A (REGULATOR)	ELECTRICAL COMPONENTS	27F630T		13-L7805C-VAP
IC202	266911	IC L7805CV 1.5A (REGULATOR)	ELECTRICAL COMPONENTS	27V512T		13-L7805C-VAP
IC202	266911	IC L7805CV 1.5A (REGULATOR)	ELECTRICAL COMPONENTS	27F520T		13-L7805C-VAP
IC202	266911	IC L7805CV 1.5A (REGULATOR)	ELECTRICAL COMPONENTS	27V520T		13-L7805C-VAP
IC202	266911	IC L7805CV 1.5A (REGULATOR)	ELECTRICAL COMPONENTS	24V511T		13-L7805C-VAP
IC202	266911	IC L7805CV 1.5A (REGULATOR)	ELECTRICAL COMPONENTS	27V513T		13-L7805C-VAP
IC301	268346	IC TDA8177	ELECTRICAL COMPONENTS	24F512T		13-0TDA81-77S
IC301	268346	IC TDA8177	ELECTRICAL COMPONENTS	27F630T		13-0TDA81-77S
IC301	268346	IC TDA8177	ELECTRICAL COMPONENTS	27V513T		13-0TDA81-77S
IC301	268346	IC TDA8177	ELECTRICAL COMPONENTS	27V512T		13-0TDA81-77S
IC301	268346	IC TDA8177	ELECTRICAL COMPONENTS	27F520T		13-0TDA81-77S
IC301	268346	IC TDA8177	ELECTRICAL COMPONENTS	27V520T		13-0TDA81-77S
IC301	268346	IC TDA8177	ELECTRICAL COMPONENTS	24V511T		13-0TDA81-77S
IC602	268347	IC TDA7266SA	ELECTRICAL COMPONENTS	24F512T		13-DA7266-SAS
IC602	268347	IC TDA7266SA	ELECTRICAL COMPONENTS	27F520T		13-DA7266-SAS
IC602	268347	IC TDA7266SA	ELECTRICAL COMPONENTS	27V513T		13-DA7266-SAS
IC602	268347	IC TDA7266SA	ELECTRICAL COMPONENTS	24V511T		13-DA7266-SAS

Symbol	Stock	Description	Circuit	Model	TypeCode	Drawing
IC602	268347	IC TDA7266SA	ELECTRICAL COMPONENTS	27F630T		13-DA7266-SAS
IC602	268347	IC TDA7266SA	ELECTRICAL COMPONENTS	27V520T		13-DA7266-SAS
IC602	268347	IC TDA7266SA	ELECTRICAL COMPONENTS	27V512T		13-DA7266-SAS
IC801	268348	IC STR-W6735	ELECTRICAL COMPONENTS	27V512T		13-STRW67-35S
IC801	268348	IC STR-W6735	ELECTRICAL COMPONENTS	27F520T		13-STRW67-35S
IC801	268348	IC STR-W6735	ELECTRICAL COMPONENTS	27V513T		13-STRW67-35S
IC801	268348	IC STR-W6735	ELECTRICAL COMPONENTS	24F512T		13-STRW67-35S
IC801	268348	IC STR-W6735	ELECTRICAL COMPONENTS	27V520T		13-STRW67-35S
IC801	268348	IC STR-W6735	ELECTRICAL COMPONENTS	24V511T		13-STRW67-35S
IC801	268348	IC STR-W6735	ELECTRICAL COMPONENTS	27F630T		13-STRW67-35S
IC802	268349	PHOTOCOUPLER PS2561L1-1-V(WF)	ELECTRICAL COMPONENTS	27F520T	S	13-PS2561-WFP
IC802	268349	PHOTOCOUPLER PS2561L1-1-V(WF)	ELECTRICAL COMPONENTS	24F512T	S	13-PS2561-WFP
IC802	268349	PHOTOCOUPLER PS2561L1-1-V(WF)	ELECTRICAL COMPONENTS	27V520T		13-PS2561-WFP
IC802	268349	PHOTOCOUPLER PS2561L1-1-V(WF)	ELECTRICAL COMPONENTS	27V513T	S	13-PS2561-WFP
IC802	268349	PHOTOCOUPLER PS2561L1-1-V(WF)	ELECTRICAL COMPONENTS	24V511T		13-PS2561-WFP
IC802	268349	PHOTOCOUPLER PS2561L1-1-V(WF)	ELECTRICAL COMPONENTS	27V512T	S	13-PS2561-WFP
IC802	268349	PHOTOCOUPLER PS2561L1-1-V(WF)	ELECTRICAL COMPONENTS	27F630T	S	13-PS2561-WFP
IC901	268350	IC 4052	ELECTRICAL COMPONENTS	24F512T		13-000040-52P
IC901	268350	IC 4052	ELECTRICAL COMPONENTS	27F630T		13-000040-52P
IC901	268350	IC 4052	ELECTRICAL COMPONENTS	27V520T		13-000040-52P
IC901	268350	IC 4052	ELECTRICAL COMPONENTS	27V512T		13-000040-52P
IC901	268350	IC 4052	ELECTRICAL COMPONENTS	27V513T		13-000040-52P
IC901	268350	IC 4052	ELECTRICAL COMPONENTS	27F520T		13-000040-52P
IC901	268350	IC 4052	ELECTRICAL COMPONENTS	24V511T		13-000040-52P
INLAY	267054	INLAY SIDE AV	ELECTRICAL COMPONENTS	24V511T		58-D106SI-3UI1E
INLAY	267054	INLAY SIDE AV	ELECTRICAL COMPONENTS	24F512T		58-D106SI-3UI1E
INLAY	268445	INLAY REAR AV	ELECTRICAL COMPONENTS	24F512T		58-C189RI-LUI1B
INLAY	268483	INLAY REAR AV	INSTRUMENT	24V511T		35833740
INLAY	268484	INLAY SIDE AV	INSTRUMENT	24V511T		35833760
INLAY	268445	INLAY REAR AV	ELECTRICAL COMPONENTS	24V511T		58-C189RI-LUI1B
IR	266876	IR RECEIVER MODULE	ELECTRICAL COMPONENTS	27V520T		02-IRR001-XX5
IR	266876	IR RECEIVER MODULE	ELECTRICAL COMPONENTS	24F512T	S	02-IRR001-XX5
IR	268400	IR BRACKET	ELECTRICAL COMPONENTS	27V520T		62-411370-0UN
IR	266876	IR RECEIVER MODULE	ELECTRICAL COMPONENTS	24V511T		02-IRR001-XX5
IR	266876	IR RECEIVER MODULE	ELECTRICAL COMPONENTS	27F520T		02-IRR001-XX5
IR	266876	IR RECEIVER MODULE	ELECTRICAL COMPONENTS	27F630T		02-IRR001-XX5
IR	268400	IR BRACKET	ELECTRICAL COMPONENTS	27F630T		62-411370-0UN
IR	268400	IR BRACKET	ELECTRICAL COMPONENTS	27F520T		62-411370-0UN
J1005	267008	COIL PL - 22UH +/-10% LGA0305-	ELECTRICAL COMPONENTS	24F512T		34-A220K0-1IX
J1005	267008	COIL PL - 22UH +/-10% LGA0305-	ELECTRICAL COMPONENTS	27F520T		34-A220K0-1IX
J1005	267008	COIL PL - 22UH +/-10% LGA0305-	ELECTRICAL COMPONENTS	24V511T		34-A220K0-1IX
J1005	267008	COIL PL - 22UH +/-10% LGA0305-	ELECTRICAL COMPONENTS	27F630T		34-A220K0-1IX
J1005	267008	COIL PL - 22UH +/-10% LGA0305-	ELECTRICAL COMPONENTS	27V520T		34-A220K0-1IX
J310	266885	DIODE 1N4148 (SWITCHING)	ELECTRICAL COMPONENTS	24V511T		10-1N4148-ABX
J310	266885	DIODE 1N4148 (SWITCHING)	ELECTRICAL COMPONENTS	27F520T		10-1N4148-ABX
J310	266885	DIODE 1N4148 (SWITCHING)	ELECTRICAL COMPONENTS	27F630T		10-1N4148-ABX
J310	266885	DIODE 1N4148 (SWITCHING)	ELECTRICAL COMPONENTS	27V520T		10-1N4148-ABX
J310	266885	DIODE 1N4148 (SWITCHING)	ELECTRICAL COMPONENTS	24F512T		10-1N4148-ABX
KNOB	268468	POWER KNOB	INSTRUMENT	24F512T		56-411630-0HA9A
KNOB	268448	KNOB ADAPTER	ELECTRICAL COMPONENTS	24V511T		62-307210-0HA
KNOB	268485	POWER KNOB	INSTRUMENT	24V511T		56-C228PK-1HA1A
L002	267010	COIL PL - 10 UH +/-5%	ELECTRICAL COMPONENTS	27F520T		34-R100J2-0EX
L002	267010	COIL PL - 10 UH +/-5%	ELECTRICAL COMPONENTS	27V520T		34-R100J2-0EX
L002	267010	COIL PL - 10 UH +/-5%	ELECTRICAL COMPONENTS	27V512T		34-R100J2-0EX
L002	267010	COIL PL - 10 UH +/-5%	ELECTRICAL COMPONENTS	24F512T		34-R100J2-0EX
L002	267010	COIL PL - 10 UH +/-5%	ELECTRICAL COMPONENTS	27F630T		34-R100J2-0EX
L002	267010	COIL PL - 10 UH +/-5%	ELECTRICAL COMPONENTS	27V513T		34-R100J2-0EX
L002	267010	COIL PL - 10 UH +/-5%	ELECTRICAL COMPONENTS	24V511T		34-R100J2-0EX
L1001	267008	COIL PL - 22UH +/-10% LGA0305-	ELECTRICAL COMPONENTS	27V513T		34-A220K0-1IX
L1001	267013	COIL PL - 22 UH +/-5%	ELECTRICAL COMPONENTS	24F512T		34-R220J2-0EX

Symbol	Stock	Description	Circuit	Model	TypeCode	Drawing
L1001	267008	COIL PL - 22UH +/-10% LGA0305-	ELECTRICAL COMPONENTS	24V511T		34-A220K0-1IX
L1001	267008	COIL PL - 22UH +/-10% LGA0305-	ELECTRICAL COMPONENTS	27F520T		34-A220K0-1IX
L1001	267008	COIL PL - 22UH +/-10% LGA0305-	ELECTRICAL COMPONENTS	27V520T		34-A220K0-1IX
L1001	267008	COIL PL - 22UH +/-10% LGA0305-	ELECTRICAL COMPONENTS	27F630T		34-A220K0-1IX
L1001	267008	COIL PL - 22UH +/-10% LGA0305-	ELECTRICAL COMPONENTS	27V512T		34-A220K0-1IX
L101	268351	COIL PL - 47 UH +/-5%	ELECTRICAL COMPONENTS	24F512T		34-R470J2-0EX
L101	268351	COIL PL - 47 UH +/-5%	ELECTRICAL COMPONENTS	27V513T		34-R470J2-0EX
L101	268351	COIL PL - 47 UH +/-5%	ELECTRICAL COMPONENTS	27V512T		34-R470J2-0EX
L101	268351	COIL PL - 47 UH +/-5%	ELECTRICAL COMPONENTS	27F630T		34-R470J2-0EX
L101	268351	COIL PL - 47 UH +/-5%	ELECTRICAL COMPONENTS	27F520T		34-R470J2-0EX
L101	268351	COIL PL - 47 UH +/-5%	ELECTRICAL COMPONENTS	27V520T		34-R470J2-0EX
L101	268351	COIL PL - 47 UH +/-5%	ELECTRICAL COMPONENTS	24V511T		34-R470J2-0EX
L102	267007	COIL CHOKE 1 UH +/-10%	ELECTRICAL COMPONENTS	27F630T		34-A109K0-1IX
L102	267007	COIL CHOKE 1 UH +/-10%	ELECTRICAL COMPONENTS	27V512T		34-A109K0-1IX
L102	267007	COIL CHOKE 1 UH +/-10%	ELECTRICAL COMPONENTS	27V513T		34-A109K0-1IX
L102	267007	COIL CHOKE 1 UH +/-10%	ELECTRICAL COMPONENTS	27F520T		34-A109K0-1IX
L102	267007	COIL CHOKE 1 UH +/-10%	ELECTRICAL COMPONENTS	24F512T		34-A109K0-1IX
L102	267007	COIL CHOKE 1 UH +/-10%	ELECTRICAL COMPONENTS	24V511T		34-A109K0-1IX
L102	267007	COIL CHOKE 1 UH +/-10%	ELECTRICAL COMPONENTS	27V520T		34-A109K0-1IX
L1201	267010	COIL PL - 10 UH +/-5%	ELECTRICAL COMPONENTS	27F630T		34-R100J2-0EX
L1201	267010	COIL PL - 10 UH +/-5%	ELECTRICAL COMPONENTS	27V520T		34-R100J2-0EX
L1201	267010	COIL PL - 10 UH +/-5%	ELECTRICAL COMPONENTS	27F520T		34-R100J2-0EX
L1211	267010	COIL PL - 10 UH +/-5%	ELECTRICAL COMPONENTS	27F630T		34-R100J2-0EX
L1211	267010	COIL PL - 10 UH +/-5%	ELECTRICAL COMPONENTS	27V520T		34-R100J2-0EX
L1211	267010	COIL PL - 10 UH +/-5%	ELECTRICAL COMPONENTS	27F520T		34-R100J2-0EX
L1212	267010	COIL PL - 10 UH +/-5%	ELECTRICAL COMPONENTS	27F520T		34-R100J2-0EX
L1212	267010	COIL PL - 10 UH +/-5%	ELECTRICAL COMPONENTS	27V520T		34-R100J2-0EX
L1212	267010	COIL PL - 10 UH +/-5%	ELECTRICAL COMPONENTS	27F630T		34-R100J2-0EX
L1213	267010	COIL PL - 10 UH +/-5%	ELECTRICAL COMPONENTS	27F520T		34-R100J2-0EX
L1213	267010	COIL PL - 10 UH +/-5%	ELECTRICAL COMPONENTS	27V520T		34-R100J2-0EX
L1213	267010	COIL PL - 10 UH +/-5%	ELECTRICAL COMPONENTS	27F630T		34-R100J2-0EX
L1214	267010	COIL PL - 10 UH +/-5%	ELECTRICAL COMPONENTS	27V520T		34-R100J2-0EX
L1214	267010	COIL PL - 10 UH +/-5%	ELECTRICAL COMPONENTS	27F520T		34-R100J2-0EX
L1214	267010	COIL PL - 10 UH +/-5%	ELECTRICAL COMPONENTS	27F630T		34-R100J2-0EX
L1215	267010	COIL PL - 10 UH +/-5%	ELECTRICAL COMPONENTS	27F630T		34-R100J2-0EX
L1215	267010	COIL PL - 10 UH +/-5%	ELECTRICAL COMPONENTS	27V520T		34-R100J2-0EX
L1215	267010	COIL PL - 10 UH +/-5%	ELECTRICAL COMPONENTS	27F520T		34-R100J2-0EX
L1216	267009	COIL CHOKE 0.6 UH +/-10%	ELECTRICAL COMPONENTS	27F520T		34-A608K6-1BX
L1216	267009	COIL CHOKE 0.6 UH +/-10%	ELECTRICAL COMPONENTS	27F630T		34-A608K6-1BX
L1216	267009	COIL CHOKE 0.6 UH +/-10%	ELECTRICAL COMPONENTS	27V520T		34-A608K6-1BX
L1217	267010	COIL PL - 10 UH +/-5%	ELECTRICAL COMPONENTS	27F630T		34-R100J2-0EX
L1217	267010	COIL PL - 10 UH +/-5%	ELECTRICAL COMPONENTS	27F520T		34-R100J2-0EX
L1217	267010	COIL PL - 10 UH +/-5%	ELECTRICAL COMPONENTS	27V520T		34-R100J2-0EX
L204	267013	COIL PL - 22 UH +/-5%	ELECTRICAL COMPONENTS	24F512T		34-R220J2-0EX
L204	267013	COIL PL - 22 UH +/-5%	ELECTRICAL COMPONENTS	27V513T		34-R220J2-0EX
L204	267013	COIL PL - 22 UH +/-5%	ELECTRICAL COMPONENTS	27V520T		34-R220J2-0EX
L204	267013	COIL PL - 22 UH +/-5%	ELECTRICAL COMPONENTS	24V511T		34-R220J2-0EX
L204	267013	COIL PL - 22 UH +/-5%	ELECTRICAL COMPONENTS	27V512T		34-R220J2-0EX
L204	267013	COIL PL - 22 UH +/-5%	ELECTRICAL COMPONENTS	27F630T		34-R220J2-0EX
L204	267013	COIL PL - 22 UH +/-5%	ELECTRICAL COMPONENTS	27F520T		34-R220J2-0EX
L205	267013	COIL PL - 22 UH +/-5%	ELECTRICAL COMPONENTS	27F630T		34-R220J2-0EX
L205	267013	COIL PL - 22 UH +/-5%	ELECTRICAL COMPONENTS	27F520T		34-R220J2-0EX
L205	267013	COIL PL - 22 UH +/-5%	ELECTRICAL COMPONENTS	27V520T		34-R220J2-0EX
L205	267013	COIL PL - 22 UH +/-5%	ELECTRICAL COMPONENTS	27V513T		34-R220J2-0EX
L205	267013	COIL PL - 22 UH +/-5%	ELECTRICAL COMPONENTS	27V512T		34-R220J2-0EX
L205	267013	COIL PL - 22 UH +/-5%	ELECTRICAL COMPONENTS	24F512T		34-R220J2-0EX
L205	267013	COIL PL - 22 UH +/-5%	ELECTRICAL COMPONENTS	24V511T		34-R220J2-0EX
L206	267013	COIL PL - 22 UH +/-5%	ELECTRICAL COMPONENTS	27F520T		34-R220J2-0EX
L206	267013	COIL PL - 22 UH +/-5%	ELECTRICAL COMPONENTS	27F630T		34-R220J2-0EX
L206	267013	COIL PL - 22 UH +/-5%	ELECTRICAL COMPONENTS	27V512T		34-R220J2-0EX

Symbol	Stock	Description	Circuit	Model	TypeCode	Drawing
L206	267013	COIL PL - 22 UH +/-5%	ELECTRICAL COMPONENTS	24F512T		34-R220J2-0EX
L206	267013	COIL PL - 22 UH +/-5%	ELECTRICAL COMPONENTS	27V513T		34-R220J2-0EX
L206	267013	COIL PL - 22 UH +/-5%	ELECTRICAL COMPONENTS	27V520T		34-R220J2-0EX
L206	267013	COIL PL - 22 UH +/-5%	ELECTRICAL COMPONENTS	24V511T		34-R220J2-0EX
L208	267013	COIL PL - 22 UH +/-5%	ELECTRICAL COMPONENTS	27F630T		34-R220J2-0EX
L208	267013	COIL PL - 22 UH +/-5%	ELECTRICAL COMPONENTS	24V511T		34-R220J2-0EX
L208	267013	COIL PL - 22 UH +/-5%	ELECTRICAL COMPONENTS	27F520T		34-R220J2-0EX
L208	267013	COIL PL - 22 UH +/-5%	ELECTRICAL COMPONENTS	24F512T		34-R220J2-0EX
L208	267013	COIL PL - 22 UH +/-5%	ELECTRICAL COMPONENTS	27V520T		34-R220J2-0EX
L208	267013	COIL PL - 22 UH +/-5%	ELECTRICAL COMPONENTS	27V512T		34-R220J2-0EX
L208	267013	COIL PL - 22 UH +/-5%	ELECTRICAL COMPONENTS	27V513T		34-R220J2-0EX
L209	267010	COIL PL - 10 UH +/-5%	ELECTRICAL COMPONENTS	27V520T		34-R100J2-0EX
L209	267010	COIL PL - 10 UH +/-5%	ELECTRICAL COMPONENTS	27V513T		34-R100J2-0EX
L209	267010	COIL PL - 10 UH +/-5%	ELECTRICAL COMPONENTS	24V511T		34-R100J2-0EX
L209	267010	COIL PL - 10 UH +/-5%	ELECTRICAL COMPONENTS	24F512T		34-R100J2-0EX
L209	267010	COIL PL - 10 UH +/-5%	ELECTRICAL COMPONENTS	27F630T		34-R100J2-0EX
L209	267010	COIL PL - 10 UH +/-5%	ELECTRICAL COMPONENTS	27V512T		34-R100J2-0EX
L209	267010	COIL PL - 10 UH +/-5%	ELECTRICAL COMPONENTS	27F520T		34-R100J2-0EX
L212	267010	COIL PL - 10 UH +/-5%	ELECTRICAL COMPONENTS	24F512T		34-R100J2-0EX
L212	267010	COIL PL - 10 UH +/-5%	ELECTRICAL COMPONENTS	27V520T		34-R100J2-0EX
L212	267010	COIL PL - 10 UH +/-5%	ELECTRICAL COMPONENTS	24V511T		34-R100J2-0EX
L212	267010	COIL PL - 10 UH +/-5%	ELECTRICAL COMPONENTS	27V513T		34-R100J2-0EX
L212	267010	COIL PL - 10 UH +/-5%	ELECTRICAL COMPONENTS	27V512T		34-R100J2-0EX
L212	267010	COIL PL - 10 UH +/-5%	ELECTRICAL COMPONENTS	27F520T		34-R100J2-0EX
L212	267010	COIL PL - 10 UH +/-5%	ELECTRICAL COMPONENTS	27F630T		34-R100J2-0EX
L301	268352	FERR BEAD LB 8X5.5	ELECTRICAL COMPONENTS	27V520T		35-332220-00X
L301	268352	FERR BEAD LB 8X5.5	ELECTRICAL COMPONENTS	27V513T		35-332220-00X
L301	268352	FERR BEAD LB 8X5.5	ELECTRICAL COMPONENTS	24F512T		35-332220-00X
L301	268352	FERR BEAD LB 8X5.5	ELECTRICAL COMPONENTS	24V511T		35-332220-00X
L301	268352	FERR BEAD LB 8X5.5	ELECTRICAL COMPONENTS	27V512T		35-332220-00X
L301	268352	FERR BEAD LB 8X5.5	ELECTRICAL COMPONENTS	27F520T		35-332220-00X
L301	268352	FERR BEAD LB 8X5.5	ELECTRICAL COMPONENTS	27F630T		35-332220-00X
L411	267009	COIL CHOKE 0.6 UH +/-10%	ELECTRICAL COMPONENTS	27V520T		34-A608K6-1BX
L411	267009	COIL CHOKE 0.6 UH +/-10%	ELECTRICAL COMPONENTS	27F630T		34-A608K6-1BX
L411	267009	COIL CHOKE 0.6 UH +/-10%	ELECTRICAL COMPONENTS	27V512T		34-A608K6-1BX
L411	267009	COIL CHOKE 0.6 UH +/-10%	ELECTRICAL COMPONENTS	24V511T		34-A608K6-1BX
L411	267009	COIL CHOKE 0.6 UH +/-10%	ELECTRICAL COMPONENTS	27V513T		34-A608K6-1BX
L411	267009	COIL CHOKE 0.6 UH +/-10%	ELECTRICAL COMPONENTS	27F520T		34-A608K6-1BX
L413	268353	COIL CHOKE 600 UH	ELECTRICAL COMPONENTS	27V520T		36-WID601-XX1
L413	268353	COIL CHOKE 600 UH	ELECTRICAL COMPONENTS	27F630T		36-WID601-XX1
L413	268353	COIL CHOKE 600 UH	ELECTRICAL COMPONENTS	24F512T		36-WID601-XX1
L413	268353	COIL CHOKE 600 UH	ELECTRICAL COMPONENTS	27F520T		36-WID601-XX1
L413	268353	COIL CHOKE 600 UH	ELECTRICAL COMPONENTS	27V513T		36-WID601-XX1
L413	268353	COIL CHOKE 600 UH	ELECTRICAL COMPONENTS	27V512T		36-WID601-XX1
L413	268353	COIL CHOKE 600 UH	ELECTRICAL COMPONENTS	24V511T		36-WID601-XX1
L414	268441	COIL LINEARITY 15 UH	ELECTRICAL COMPONENTS	24F512T		36-LIN150-XX1
L414	268427	COIL LINEARITY 18 UH	ELECTRICAL COMPONENTS	27V520T		36-LIN180-XX1
L414	268427	COIL LINEARITY 18 UH	ELECTRICAL COMPONENTS	27V513T		36-LIN180-XX1
L414	268427	COIL LINEARITY 18 UH	ELECTRICAL COMPONENTS	27V512T		36-LIN180-XX1
L414	268354	COIL LINEARITY 21 UH	ELECTRICAL COMPONENTS	27F630T		36-LIN210-XX1
L414	268354	COIL LINEARITY 21 UH	ELECTRICAL COMPONENTS	24V511T		36-LIN210-XX1
L414	268354	COIL LINEARITY 21 UH	ELECTRICAL COMPONENTS	27F520T		36-LIN210-XX1
L501	266885	DIODE 1N4148 (SWITCHING)	ELECTRICAL COMPONENTS	27V512T		10-1N4148-ABX
L501	266885	DIODE 1N4148 (SWITCHING)	ELECTRICAL COMPONENTS	27V513T		10-1N4148-ABX
L501	266885	DIODE 1N4148 (SWITCHING)	ELECTRICAL COMPONENTS	24F512T		10-1N4148-ABX
L501	266885	DIODE 1N4148 (SWITCHING)	ELECTRICAL COMPONENTS	27F630T		10-1N4148-ABX
L501	266885	DIODE 1N4148 (SWITCHING)	ELECTRICAL COMPONENTS	24V511T		10-1N4148-ABX
L501	266885	DIODE 1N4148 (SWITCHING)	ELECTRICAL COMPONENTS	27F520T		10-1N4148-ABX
L501	266885	DIODE 1N4148 (SWITCHING)	ELECTRICAL COMPONENTS	27V520T		10-1N4148-ABX
L502	267011	COIL CHOKE 10 UH +/-10%	ELECTRICAL COMPONENTS	24F512T		34-R100K2-1BX

Symbol	Stock	Description	Circuit	Model	TypeCode	Drawing
L503	268355	COIL CHOKE 5.6 UH +/-10%	ELECTRICAL COMPONENTS	27F520T		34-R569K2-1BX
L503	268355	COIL CHOKE 5.6 UH +/-10%	ELECTRICAL COMPONENTS	27V513T		34-R569K2-1BX
L503	267011	COIL CHOKE 10 UH +/-10%	ELECTRICAL COMPONENTS	24V511T		34-R100K2-1BX
L503	267011	COIL CHOKE 10 UH +/-10%	ELECTRICAL COMPONENTS	24F512T		34-R100K2-1BX
L503	268355	COIL CHOKE 5.6 UH +/-10%	ELECTRICAL COMPONENTS	27V520T		34-R569K2-1BX
L503	268355	COIL CHOKE 5.6 UH +/-10%	ELECTRICAL COMPONENTS	27V512T		34-R569K2-1BX
L503	268355	COIL CHOKE 5.6 UH +/-10%	ELECTRICAL COMPONENTS	27F630T		34-R569K2-1BX
L801	267012	COIL CHOKE 100 UH +/-10%	ELECTRICAL COMPONENTS	27V520T		34-R101K2-1BX
L801	267012	COIL CHOKE 100 UH +/-10%	ELECTRICAL COMPONENTS	27F630T		34-R101K2-1BX
L801	267012	COIL CHOKE 100 UH +/-10%	ELECTRICAL COMPONENTS	24F512T		34-R101K2-1BX
L801	267012	COIL CHOKE 100 UH +/-10%	ELECTRICAL COMPONENTS	27V512T		34-R101K2-1BX
L801	267012	COIL CHOKE 100 UH +/-10%	ELECTRICAL COMPONENTS	24V511T		34-R101K2-1BX
L801	267012	COIL CHOKE 100 UH +/-10%	ELECTRICAL COMPONENTS	27F520T		34-R101K2-1BX
L801	267012	COIL CHOKE 100 UH +/-10%	ELECTRICAL COMPONENTS	27V513T		34-R101K2-1BX
LABEL	268494	LABL PPRTD X-RAD	INSTRUMENT	27V520T	S	1509717B
LABEL	N/S/P	LABEL HEAT SINK	ELECTRICAL COMPONENTS	27F630T		71-ICP000-WX1
LABEL	N/S/P	LABEL	ELECTRICAL COMPONENTS	27F630T		71-DYP000-WX1
LABEL	N/S/P	LABEL	ELECTRICAL COMPONENTS	27F630T		71-270870-0A9
LABEL	268494	LABL PPRTD X-RAD	INSTRUMENT	27F630T	S	1509717B
LED	268401	LED BRACKET	ELECTRICAL COMPONENTS	27F630T		62-411380-0UN
LED	268401	LED BRACKET	ELECTRICAL COMPONENTS	27V520T		62-411380-0UN
LED	268447	LED HOLDER ABS-LG H121 (HB)	ELECTRICAL COMPONENTS	24V511T		62-226920-0HA
LED	268401	LED BRACKET	ELECTRICAL COMPONENTS	27F520T		62-411380-0UN
LENS	258015	WINDOW, IR	INSTRUMENT	27V513T	S	2558067B
LENS	258015	WINDOW, IR	INSTRUMENT	27V512T	S	2558067B
LENS	258015	WINDOW, IR	INSTRUMENT	27V520T	S	2558067B
LENS	258843	WINDOW, IR	INSTRUMENT	27F520T	S	2556915B
LENS	265445	IR WINDOW	INSTRUMENT	27F630T	S	25737000
LENS	268469	LENS	INSTRUMENT	24F512T		56-29V1LE-0HC5Z
LENS	268486	LENS	INSTRUMENT	24V511T	S	56-C228LS-0HC5Z
LOGO	268470	LOGO	INSTRUMENT	24F512T		67-L41165-0A01A
LOGO	256960	LOGO, RCA	INSTRUMENT	27V520T		2115052A
LOGO	256960	LOGO, RCA	INSTRUMENT	27V513T		2115052A
LOGO	256960	LOGO, RCA	INSTRUMENT	27F520T		2115052A
LOGO	256960	LOGO, RCA	INSTRUMENT	27V512T		2115052A
LOGO	268487	LOGO	INSTRUMENT	24V511T		35833860
MAIN	268399	MAIN BOARD BRACKET	ELECTRICAL COMPONENTS	27F630T		62-411140-0UN
MAIN	268399	MAIN BOARD BRACKET	ELECTRICAL COMPONENTS	27F520T		62-411140-0UN
MAIN	268433	MAIN BD BRACKET	ELECTRICAL COMPONENTS	24F512T		62-B159MB-3UN
MAIN	268399	MAIN BOARD BRACKET	ELECTRICAL COMPONENTS	27V520T		62-411140-0UN
MASK	MK2584	MASK & BACK ASSY	INSTRUMENT	27V520T	S	16150120
OVERLAY	268496	OVERLAY PANEL REAR	INSTRUMENT	27V513T		25764960
OVERLAY	268458	OVERLAY PANEL REAR M134 BK	INSTRUMENT	27V520T		25764940
OVERLAY	268496	OVERLAY PANEL REAR	INSTRUMENT	27V512T		25764960
OVERLAY	268458	OVERLAY PANEL REAR M134 BK	INSTRUMENT	27F630T		25764940
P001	266580	PIN BASE	ELECTRICAL COMPONENTS	27F630T		46-33079W-05X
P001	266580	PIN BASE	ELECTRICAL COMPONENTS	27V512T		46-33079W-05X
P001	266580	PIN BASE	ELECTRICAL COMPONENTS	24V511T		46-33079W-05X
P001	266580	PIN BASE	ELECTRICAL COMPONENTS	27V513T		46-33079W-05X
P001	266580	PIN BASE	ELECTRICAL COMPONENTS	27F520T		46-33079W-05X
P001	266580	PIN BASE	ELECTRICAL COMPONENTS	24F512T		46-33079W-05X
P001	266580	PIN BASE	ELECTRICAL COMPONENTS	27V520T		46-33079W-05X
P001B	268356	HS 5P24 380 TJC3-5Y/SCN-5Y	ELECTRICAL COMPONENTS	27F520T		46-35038H-05X
P001B	268356	HS 5P24 380 TJC3-5Y/SCN-5Y	ELECTRICAL COMPONENTS	27V520T		46-35038H-05X
P001B	268356	HS 5P24 380 TJC3-5Y/SCN-5Y	ELECTRICAL COMPONENTS	27F630T		46-35038H-05X
P001B	268356	HS 5P24 380 TJC3-5Y/SCN-5Y	ELECTRICAL COMPONENTS	27V512T		46-35038H-05X
P001B	268442	HS 5P 600 TJC3-5Y/SCN-5Y	ELECTRICAL COMPONENTS	24F512T		46-35154H-05X
P001B	267041	CABLE, 5 PIN 450	ELECTRICAL COMPONENTS	24V511T		46-37030H-05X
P001B	268356	HS 5P24 380 TJC3-5Y/SCN-5Y	ELECTRICAL COMPONENTS	27V513T		46-35038H-05X
P001D	268443	HS 2P2468#24 1000 TJC3-2Y/JC25	ELECTRICAL COMPONENTS	24F512T		46-39259H-02X

Symbol	Stock	Description	Circuit	Model	TypeCode	Drawing
P001D	268451	CONNECTION HS 2PIN	ELECTRICAL COMPONENTS	24V511T		46-CE035T-02J
P002	267025	CONNECTOR, 4 PIN	ELECTRICAL COMPONENTS	27F520T		46-33079W-04X
P002	267025	CONNECTOR, 4 PIN	ELECTRICAL COMPONENTS	24V511T		46-33079W-04X
P002	267025	CONNECTOR, 4 PIN	ELECTRICAL COMPONENTS	27V520T		46-33079W-04X
P002	267025	CONNECTOR, 4 PIN	ELECTRICAL COMPONENTS	27V513T		46-33079W-04X
P002	267025	CONNECTOR, 4 PIN	ELECTRICAL COMPONENTS	27F630T		46-33079W-04X
P002	267025	CONNECTOR, 4 PIN	ELECTRICAL COMPONENTS	27V512T		46-33079W-04X
P002	267025	CONNECTOR, 4 PIN	ELECTRICAL COMPONENTS	24F512T		46-33079W-04X
P003	267024	CONNECTOR, 4 PIN	ELECTRICAL COMPONENTS	24V511T		46-33079W-02X
P004	267024	CONNECTOR, 4 PIN	ELECTRICAL COMPONENTS	24F512T		46-33079W-02X
P1101	268357	RCA SOCKET RCA-3308 W/R/Y	ELECTRICAL COMPONENTS	27F630T		47-RCA019-XX1
P1101	268357	RCA SOCKET RCA-3308 W/R/Y	ELECTRICAL COMPONENTS	27V513T		47-RCA019-XX1
P1101	268357	RCA SOCKET RCA-3308 W/R/Y	ELECTRICAL COMPONENTS	27V512T		47-RCA019-XX1
P1101	268357	RCA SOCKET RCA-3308 W/R/Y	ELECTRICAL COMPONENTS	27V520T		47-RCA019-XX1
P1101	268357	RCA SOCKET RCA-3308 W/R/Y	ELECTRICAL COMPONENTS	27F520T		47-RCA019-XX1
P1103	268358	Y/C SOCKET S-W13-K2	ELECTRICAL COMPONENTS	27V520T		47-SVI015-XX0
P1103	268358	Y/C SOCKET S-W13-K2	ELECTRICAL COMPONENTS	27F520T		47-SVI015-XX0
P1103	268358	Y/C SOCKET S-W13-K2	ELECTRICAL COMPONENTS	27F630T		47-SVI015-XX0
P1202	268284	P1202	ELECTRICAL COMPONENTS	27F630T		46-21550W-12X
P1202	268284	P1202	ELECTRICAL COMPONENTS	27F520T		46-21550W-12X
P1202	268284	P1202	ELECTRICAL COMPONENTS	27V520T		46-21550W-12X
P411	267023	CONNECTOR, 4 PIN	ELECTRICAL COMPONENTS	27V513T		46-20598W-04X
P411	267023	CONNECTOR, 4 PIN	ELECTRICAL COMPONENTS	27F520T		46-20598W-04X
P411	267023	CONNECTOR, 4 PIN	ELECTRICAL COMPONENTS	24V511T		46-20598W-04X
P411	267023	CONNECTOR, 4 PIN	ELECTRICAL COMPONENTS	27F630T		46-20598W-04X
P411	267023	CONNECTOR, 4 PIN	ELECTRICAL COMPONENTS	24F512T		46-20598W-04X
P411	267023	CONNECTOR, 4 PIN	ELECTRICAL COMPONENTS	27V520T		46-20598W-04X
P411	267023	CONNECTOR, 4 PIN	ELECTRICAL COMPONENTS	27V512T		46-20598W-04X
P421	268359	HS 4P24 550MM TJC3-4Y/SCN-4Y	ELECTRICAL COMPONENTS	27V513T		46-32535H-04X
P421	268359	HS 4P24 550MM TJC3-4Y/SCN-4Y	ELECTRICAL COMPONENTS	27V512T		46-32535H-04X
P421	268359	HS 4P24 550MM TJC3-4Y/SCN-4Y	ELECTRICAL COMPONENTS	27F630T		46-32535H-04X
P421	267037	CABLE, 4 PIN 460	ELECTRICAL COMPONENTS	24V511T		46-30615H-04X
P421	268359	HS 4P24 550MM TJC3-4Y/SCN-4Y	ELECTRICAL COMPONENTS	27V520T		46-32535H-04X
P421	268359	HS 4P24 550MM TJC3-4Y/SCN-4Y	ELECTRICAL COMPONENTS	27F520T		46-32535H-04X
P421	268359	HS 4P24 550MM TJC3-4Y/SCN-4Y	ELECTRICAL COMPONENTS	24F512T		46-32535H-04X
P601	267024	CONNECTOR, 4 PIN	ELECTRICAL COMPONENTS	27V512T		46-33079W-02X
P601	267024	CONNECTOR, 4 PIN	ELECTRICAL COMPONENTS	27V520T		46-33079W-02X
P601	267024	CONNECTOR, 4 PIN	ELECTRICAL COMPONENTS	27F520T		46-33079W-02X
P601	268395	HS 2P22 600/7 TJC3-2Y	ELECTRICAL COMPONENTS	24V511T		46-27580H-02X
P601	267024	CONNECTOR, 4 PIN	ELECTRICAL COMPONENTS	24V511T		46-33079W-02X
P601	267024	CONNECTOR, 4 PIN	ELECTRICAL COMPONENTS	27V513T		46-33079W-02X
P601	267024	CONNECTOR, 4 PIN	ELECTRICAL COMPONENTS	24F512T		46-33079W-02X
P601	267024	CONNECTOR, 4 PIN	ELECTRICAL COMPONENTS	27F630T		46-33079W-02X
P602	267024	CONNECTOR, 4 PIN	ELECTRICAL COMPONENTS	24V511T		46-33079W-02X
P602	267024	CONNECTOR, 4 PIN	ELECTRICAL COMPONENTS	27V512T		46-33079W-02X
P602	267024	CONNECTOR, 4 PIN	ELECTRICAL COMPONENTS	24F512T		46-33079W-02X
P602	267024	CONNECTOR, 4 PIN	ELECTRICAL COMPONENTS	27V520T		46-33079W-02X
P602	267024	CONNECTOR, 4 PIN	ELECTRICAL COMPONENTS	27F630T		46-33079W-02X
P602	267024	CONNECTOR, 4 PIN	ELECTRICAL COMPONENTS	27V513T		46-33079W-02X
P602	268395	HS 2P22 600/7 TJC3-2Y	ELECTRICAL COMPONENTS	24V511T		46-27580H-02X
P602	267024	CONNECTOR, 4 PIN	ELECTRICAL COMPONENTS	27F520T		46-33079W-02X
P801	267039	CONNECTOR AC 3 PIN	ELECTRICAL COMPONENTS	27F630T		46-35184W-03X
P801	267039	CONNECTOR AC 3 PIN	ELECTRICAL COMPONENTS	27F520T		46-35184W-03X
P801	267039	CONNECTOR AC 3 PIN	ELECTRICAL COMPONENTS	24F512T		46-35184W-03X
P801	267039	CONNECTOR AC 3 PIN	ELECTRICAL COMPONENTS	24V511T		46-35184W-03X
P801	267039	CONNECTOR AC 3 PIN	ELECTRICAL COMPONENTS	27V513T		46-35184W-03X
P801	267039	CONNECTOR AC 3 PIN	ELECTRICAL COMPONENTS	27V520T		46-35184W-03X
P801	267039	CONNECTOR AC 3 PIN	ELECTRICAL COMPONENTS	27V512T		46-35184W-03X
P803	267020	CONNECTOR, 2 PIN	ELECTRICAL COMPONENTS	24F512T		46-10962W-02X
P803	267020	CONNECTOR, 2 PIN	ELECTRICAL COMPONENTS	27V513T		46-10962W-02X

Symbol	Stock	Description	Circuit	Model	TypeCode	Drawing
P803	267020	CONNECTOR, 2 PIN	ELECTRICAL COMPONENTS	27F520T		46-10962W-02X
P803	267020	CONNECTOR, 2 PIN	ELECTRICAL COMPONENTS	27V520T		46-10962W-02X
P803	267020	CONNECTOR, 2 PIN	ELECTRICAL COMPONENTS	24V511T		46-10962W-02X
P803	267020	CONNECTOR, 2 PIN	ELECTRICAL COMPONENTS	27F630T		46-10962W-02X
P803	267020	CONNECTOR, 2 PIN	ELECTRICAL COMPONENTS	27V512T		46-10962W-02X
P901	267046	Y/C SOCKET VERTICAL TYPE	ELECTRICAL COMPONENTS	27V512T		47-SVI002-XX0
P901	267046	Y/C SOCKET VERTICAL TYPE	ELECTRICAL COMPONENTS	24V511T		47-SVI002-XX0
P901	267046	Y/C SOCKET VERTICAL TYPE	ELECTRICAL COMPONENTS	27V513T		47-SVI002-XX0
P901	267046	Y/C SOCKET VERTICAL TYPE	ELECTRICAL COMPONENTS	24F512T		47-SVI002-XX0
P902	268360	RCA JACK 3PV YEL WHI RED/SW	ELECTRICAL COMPONENTS	24F512T		47-RCA023-XX1
P902	268360	RCA JACK 3PV YEL WHI RED/SW	ELECTRICAL COMPONENTS	24V511T		47-RCA023-XX1
P902	268360	RCA JACK 3PV YEL WHI RED/SW	ELECTRICAL COMPONENTS	27V512T		47-RCA023-XX1
P902	268360	RCA JACK 3PV YEL WHI RED/SW	ELECTRICAL COMPONENTS	27V513T		47-RCA023-XX1
P903	268360	RCA JACK 3PV YEL WHI RED/SW	ELECTRICAL COMPONENTS	27V520T		47-RCA023-XX1
P903	268360	RCA JACK 3PV YEL WHI RED/SW	ELECTRICAL COMPONENTS	27F520T		47-RCA023-XX1
P903	268360	RCA JACK 3PV YEL WHI RED/SW	ELECTRICAL COMPONENTS	27F630T		47-RCA023-XX1
P904	268361	RCA SOCKET AV-3.2-3LK-N2	ELECTRICAL COMPONENTS	27V520T		47-RCA089-XX0
P904	268361	RCA SOCKET AV-3.2-3LK-N2	ELECTRICAL COMPONENTS	27F520T		47-RCA089-XX0
P904	268361	RCA SOCKET AV-3.2-3LK-N2	ELECTRICAL COMPONENTS	27F630T		47-RCA089-XX0
P905	268360	RCA JACK 3PV YEL WHI RED/SW	ELECTRICAL COMPONENTS	24V511T		47-RCA023-XX1
P905	268360	RCA JACK 3PV YEL WHI RED/SW	ELECTRICAL COMPONENTS	24F512T		47-RCA023-XX1
P905	268360	RCA JACK 3PV YEL WHI RED/SW	ELECTRICAL COMPONENTS	27F520T		47-RCA023-XX1
P905	268360	RCA JACK 3PV YEL WHI RED/SW	ELECTRICAL COMPONENTS	27F630T		47-RCA023-XX1
P905	268360	RCA JACK 3PV YEL WHI RED/SW	ELECTRICAL COMPONENTS	27V520T		47-RCA023-XX1
P911	268362	HS 7P 600 TJC3-7Y/SCN-7Y	ELECTRICAL COMPONENTS	27F520T		46-38610H-07X
P911	268362	HS 7P 600 TJC3-7Y/SCN-7Y	ELECTRICAL COMPONENTS	27V520T		46-38610H-07X
P911	268362	HS 7P 600 TJC3-7Y/SCN-7Y	ELECTRICAL COMPONENTS	27F630T		46-38610H-07X
P950	268363	PIN BASE *7 TJC3-7A	ELECTRICAL COMPONENTS	27F520T		46-33079W-07X
P950	268426	HS 4P 1185#26/1007#24 650MM TJ	ELECTRICAL COMPONENTS	24F512T		46-CD065F-04001
P950	268363	PIN BASE *7 TJC3-7A	ELECTRICAL COMPONENTS	27V520T		46-33079W-07X
P950	268363	PIN BASE *7 TJC3-7A	ELECTRICAL COMPONENTS	27F630T		46-33079W-07X
P951R	266585	RCA JACK RED (THREE FEET)	ELECTRICAL COMPONENTS	24V511T		47-RCA017-XX0
P951R	266585	RCA JACK RED (THREE FEET)	ELECTRICAL COMPONENTS	24F512T		47-RCA017-XX0
P952L	266587	RCA SOCKET (WHITE)	ELECTRICAL COMPONENTS	24F512T		47-RCA002-XX0
P952L	266587	RCA SOCKET (WHITE)	ELECTRICAL COMPONENTS	24V511T		47-RCA002-XX0
P953V	266589	RCA SOCKET (YELLOW)	ELECTRICAL COMPONENTS	24F512T		47-RCA003-XX0
P953V	266589	RCA SOCKET (YELLOW)	ELECTRICAL COMPONENTS	24V511T		47-RCA003-XX0
PANEL	268458	OVERLAY PANEL REAR M134 BK	INSTRUMENT	27F520T		25764940
PIN	266580	PIN BASE	ELECTRICAL COMPONENTS	27V520T		46-33079W-05X
PIN	266580	PIN BASE	ELECTRICAL COMPONENTS	27F630T		46-33079W-05X
PIN	266580	PIN BASE	ELECTRICAL COMPONENTS	24V511T		46-33079W-05X
PIN	266580	PIN BASE	ELECTRICAL COMPONENTS	27F520T		46-33079W-05X
PIN	266580	PIN BASE	ELECTRICAL COMPONENTS	24F512T		46-33079W-05X
PIPE	263529	LIGHTPIPE	INSTRUMENT	27F630T	S	25668890
PIPE	257998	LIGHTPIPE	INSTRUMENT	27V512T	S	2558064A
PIPE	257998	LIGHTPIPE	INSTRUMENT	27V520T	S	2558064A
PIPE	257985	LIGHTPIPE	INSTRUMENT	27F520T	S	2556924B
PIPE	257998	LIGHTPIPE	INSTRUMENT	27V513T	S	2558064A
POWER	268396	POWER CORD	ELECTRICAL COMPONENTS	27F630T		51-BC0200-0LG01
POWER	268396	POWER CORD	ELECTRICAL COMPONENTS	24F512T		51-BC0200-0LG01
POWER	268396	POWER CORD	ELECTRICAL COMPONENTS	27F520T	S	51-BC0200-0LG01
POWER	268396	POWER CORD	ELECTRICAL COMPONENTS	27V520T		51-BC0200-0LG01
Q007	266579	TRANSISTOR 2SC1815Y	ELECTRICAL COMPONENTS	27V513T		11-SC1815-YBX
Q007	266579	TRANSISTOR 2SC1815Y	ELECTRICAL COMPONENTS	27V512T		11-SC1815-YBX
Q007	266579	TRANSISTOR 2SC1815Y	ELECTRICAL COMPONENTS	24F512T		11-SC1815-YBX
Q007	266579	TRANSISTOR 2SC1815Y	ELECTRICAL COMPONENTS	27V520T		11-SC1815-YBX
Q007	266579	TRANSISTOR 2SC1815Y	ELECTRICAL COMPONENTS	27F630T		11-SC1815-YBX
Q007	266579	TRANSISTOR 2SC1815Y	ELECTRICAL COMPONENTS	27F520T		11-SC1815-YBX
Q007	266579	TRANSISTOR 2SC1815Y	ELECTRICAL COMPONENTS	24V511T		11-SC1815-YBX
Q008	266899	TRANSISTOR 2SA1015Y	ELECTRICAL COMPONENTS	27F630T		11-SA1015-YBX

Symbol	Stock	Description	Circuit	Model	TypeCode	Drawing
Q008	266899	TRANSISTOR 2SA1015Y	ELECTRICAL COMPONENTS	24F512T		11-SA1015-YBX
Q008	266899	TRANSISTOR 2SA1015Y	ELECTRICAL COMPONENTS	27V520T		11-SA1015-YBX
Q008	266899	TRANSISTOR 2SA1015Y	ELECTRICAL COMPONENTS	27V512T		11-SA1015-YBX
Q008	266899	TRANSISTOR 2SA1015Y	ELECTRICAL COMPONENTS	27F520T		11-SA1015-YBX
Q008	266899	TRANSISTOR 2SA1015Y	ELECTRICAL COMPONENTS	24V511T		11-SA1015-YBX
Q008	266899	TRANSISTOR 2SA1015Y	ELECTRICAL COMPONENTS	27V513T		11-SA1015-YBX
Q01	268364	TRANSISTOR 2SC2236-Y	ELECTRICAL COMPONENTS	24F512T		11-SC2236-YBX
Q01	268364	TRANSISTOR 2SC2236-Y	ELECTRICAL COMPONENTS	24V511T		11-SC2236-YBX
Q01	268364	TRANSISTOR 2SC2236-Y	ELECTRICAL COMPONENTS	27V513T		11-SC2236-YBX
Q01	268364	TRANSISTOR 2SC2236-Y	ELECTRICAL COMPONENTS	27V512T		11-SC2236-YBX
Q01	268364	TRANSISTOR 2SC2236-Y	ELECTRICAL COMPONENTS	27F630T		11-SC2236-YBX
Q01	268364	TRANSISTOR 2SC2236-Y	ELECTRICAL COMPONENTS	27F520T		11-SC2236-YBX
Q01	268364	TRANSISTOR 2SC2236-Y	ELECTRICAL COMPONENTS	27V520T		11-SC2236-YBX
Q033C	266579	TRANSISTOR 2SC1815Y	ELECTRICAL COMPONENTS	27F630T		11-SC1815-YBX
Q033C	266579	TRANSISTOR 2SC1815Y	ELECTRICAL COMPONENTS	27V520T		11-SC1815-YBX
Q033C	266579	TRANSISTOR 2SC1815Y	ELECTRICAL COMPONENTS	27V513T		11-SC1815-YBX
Q033C	266579	TRANSISTOR 2SC1815Y	ELECTRICAL COMPONENTS	27F520T		11-SC1815-YBX
Q033C	266579	TRANSISTOR 2SC1815Y	ELECTRICAL COMPONENTS	27V512T		11-SC1815-YBX
Q1003	266579	TRANSISTOR 2SC1815Y	ELECTRICAL COMPONENTS	24F512T		11-SC1815-YBX
Q1003	266579	TRANSISTOR 2SC1815Y	ELECTRICAL COMPONENTS	24V511T		11-SC1815-YBX
Q1003	266579	TRANSISTOR 2SC1815Y	ELECTRICAL COMPONENTS	27F520T		11-SC1815-YBX
Q1003	266579	TRANSISTOR 2SC1815Y	ELECTRICAL COMPONENTS	27V512T		11-SC1815-YBX
Q1003	266579	TRANSISTOR 2SC1815Y	ELECTRICAL COMPONENTS	27V520T		11-SC1815-YBX
Q1003	266579	TRANSISTOR 2SC1815Y	ELECTRICAL COMPONENTS	27V513T		11-SC1815-YBX
Q1003	266579	TRANSISTOR 2SC1815Y	ELECTRICAL COMPONENTS	27F630T		11-SC1815-YBX
Q101	266902	TRANSISTOR 2SC3779D (RF AMPL)	ELECTRICAL COMPONENTS	27F630T		11-SC3779-DBX
Q101	266902	TRANSISTOR 2SC3779D (RF AMPL)	ELECTRICAL COMPONENTS	24F512T		11-SC3779-DBX
Q101	266902	TRANSISTOR 2SC3779D (RF AMPL)	ELECTRICAL COMPONENTS	27F520T		11-SC3779-DBX
Q101	266902	TRANSISTOR 2SC3779D (RF AMPL)	ELECTRICAL COMPONENTS	27V513T		11-SC3779-DBX
Q101	266902	TRANSISTOR 2SC3779D (RF AMPL)	ELECTRICAL COMPONENTS	27V520T		11-SC3779-DBX
Q101	266902	TRANSISTOR 2SC3779D (RF AMPL)	ELECTRICAL COMPONENTS	27V512T		11-SC3779-DBX
Q101	266902	TRANSISTOR 2SC3779D (RF AMPL)	ELECTRICAL COMPONENTS	24V511T		11-SC3779-DBX
Q1201	266579	TRANSISTOR 2SC1815Y	ELECTRICAL COMPONENTS	27V520T		11-SC1815-YBX
Q1201	266579	TRANSISTOR 2SC1815Y	ELECTRICAL COMPONENTS	27F630T		11-SC1815-YBX
Q1201	266579	TRANSISTOR 2SC1815Y	ELECTRICAL COMPONENTS	27F520T		11-SC1815-YBX
Q1202	266899	TRANSISTOR 2SA1015Y	ELECTRICAL COMPONENTS	27V520T		11-SA1015-YBX
Q1202	266899	TRANSISTOR 2SA1015Y	ELECTRICAL COMPONENTS	27F520T		11-SA1015-YBX
Q1202	266899	TRANSISTOR 2SA1015Y	ELECTRICAL COMPONENTS	27F630T		11-SA1015-YBX
Q1203	266579	TRANSISTOR 2SC1815Y	ELECTRICAL COMPONENTS	27F630T		11-SC1815-YBX
Q1203	266579	TRANSISTOR 2SC1815Y	ELECTRICAL COMPONENTS	27F520T		11-SC1815-YBX
Q1203	266579	TRANSISTOR 2SC1815Y	ELECTRICAL COMPONENTS	27V520T		11-SC1815-YBX
Q1211	266899	TRANSISTOR 2SA1015Y	ELECTRICAL COMPONENTS	27F630T		11-SA1015-YBX
Q1211	266899	TRANSISTOR 2SA1015Y	ELECTRICAL COMPONENTS	27F520T		11-SA1015-YBX
Q1211	266899	TRANSISTOR 2SA1015Y	ELECTRICAL COMPONENTS	27V520T		11-SA1015-YBX
Q1212	266579	TRANSISTOR 2SC1815Y	ELECTRICAL COMPONENTS	27F520T		11-SC1815-YBX
Q1212	266579	TRANSISTOR 2SC1815Y	ELECTRICAL COMPONENTS	27V520T		11-SC1815-YBX
Q1212	266579	TRANSISTOR 2SC1815Y	ELECTRICAL COMPONENTS	27F630T		11-SC1815-YBX
Q1213	268365	FET 2SK362-Y (N-CHANNEL)	ELECTRICAL COMPONENTS	27V520T		11-2SK362-YBX
Q1213	268365	FET 2SK362-Y (N-CHANNEL)	ELECTRICAL COMPONENTS	27F520T		11-2SK362-YBX
Q1213	268365	FET 2SK362-Y (N-CHANNEL)	ELECTRICAL COMPONENTS	27F630T		11-2SK362-YBX
Q1214	268365	FET 2SK362-Y (N-CHANNEL)	ELECTRICAL COMPONENTS	27F520T		11-2SK362-YBX
Q1214	268365	FET 2SK362-Y (N-CHANNEL)	ELECTRICAL COMPONENTS	27V520T		11-2SK362-YBX
Q1214	268365	FET 2SK362-Y (N-CHANNEL)	ELECTRICAL COMPONENTS	27F630T		11-2SK362-YBX
Q1215	266899	TRANSISTOR 2SA1015Y	ELECTRICAL COMPONENTS	27V520T		11-SA1015-YBX
Q1215	266899	TRANSISTOR 2SA1015Y	ELECTRICAL COMPONENTS	27F520T		11-SA1015-YBX
Q1215	266899	TRANSISTOR 2SA1015Y	ELECTRICAL COMPONENTS	27F630T		11-SA1015-YBX
Q1218	266899	TRANSISTOR 2SA1015Y	ELECTRICAL COMPONENTS	27V520T		11-SA1015-YBX
Q1218	266899	TRANSISTOR 2SA1015Y	ELECTRICAL COMPONENTS	27F520T		11-SA1015-YBX
Q1218	266899	TRANSISTOR 2SA1015Y	ELECTRICAL COMPONENTS	27F630T		11-SA1015-YBX
Q202	266579	TRANSISTOR 2SC1815Y	ELECTRICAL COMPONENTS	27V520T		11-SC1815-YBX

Symbol	Stock	Description	Circuit	Model	TypeCode	Drawing
Q202	266579	TRANSISTOR 2SC1815Y	ELECTRICAL COMPONENTS	27V513T		11-SC1815-YBX
Q202	266579	TRANSISTOR 2SC1815Y	ELECTRICAL COMPONENTS	27V512T		11-SC1815-YBX
Q202	266579	TRANSISTOR 2SC1815Y	ELECTRICAL COMPONENTS	27F630T		11-SC1815-YBX
Q202	266579	TRANSISTOR 2SC1815Y	ELECTRICAL COMPONENTS	24V511T		11-SC1815-YBX
Q202	266579	TRANSISTOR 2SC1815Y	ELECTRICAL COMPONENTS	24F512T		11-SC1815-YBX
Q202	266579	TRANSISTOR 2SC1815Y	ELECTRICAL COMPONENTS	27F520T		11-SC1815-YBX
Q203	266579	TRANSISTOR 2SC1815Y	ELECTRICAL COMPONENTS	27V512T		11-SC1815-YBX
Q203	266579	TRANSISTOR 2SC1815Y	ELECTRICAL COMPONENTS	24F512T		11-SC1815-YBX
Q203	266579	TRANSISTOR 2SC1815Y	ELECTRICAL COMPONENTS	27V513T		11-SC1815-YBX
Q203	266579	TRANSISTOR 2SC1815Y	ELECTRICAL COMPONENTS	24V511T		11-SC1815-YBX
Q203	266579	TRANSISTOR 2SC1815Y	ELECTRICAL COMPONENTS	27V520T		11-SC1815-YBX
Q203	266579	TRANSISTOR 2SC1815Y	ELECTRICAL COMPONENTS	27F630T		11-SC1815-YBX
Q203	266579	TRANSISTOR 2SC1815Y	ELECTRICAL COMPONENTS	27F520T		11-SC1815-YBX
Q204	266579	TRANSISTOR 2SC1815Y	ELECTRICAL COMPONENTS	24V511T		11-SC1815-YBX
Q204	266579	TRANSISTOR 2SC1815Y	ELECTRICAL COMPONENTS	27F630T		11-SC1815-YBX
Q204	266579	TRANSISTOR 2SC1815Y	ELECTRICAL COMPONENTS	27V512T		11-SC1815-YBX
Q204	266579	TRANSISTOR 2SC1815Y	ELECTRICAL COMPONENTS	27F520T		11-SC1815-YBX
Q204	266579	TRANSISTOR 2SC1815Y	ELECTRICAL COMPONENTS	27V513T		11-SC1815-YBX
Q204	266579	TRANSISTOR 2SC1815Y	ELECTRICAL COMPONENTS	24F512T		11-SC1815-YBX
Q204	266579	TRANSISTOR 2SC1815Y	ELECTRICAL COMPONENTS	27V520T		11-SC1815-YBX
Q205	266899	TRANSISTOR 2SA1015Y	ELECTRICAL COMPONENTS	27V513T		11-SA1015-YBX
Q205	266899	TRANSISTOR 2SA1015Y	ELECTRICAL COMPONENTS	27F630T		11-SA1015-YBX
Q205	266899	TRANSISTOR 2SA1015Y	ELECTRICAL COMPONENTS	24F512T		11-SA1015-YBX
Q205	266899	TRANSISTOR 2SA1015Y	ELECTRICAL COMPONENTS	27V520T		11-SA1015-YBX
Q205	266899	TRANSISTOR 2SA1015Y	ELECTRICAL COMPONENTS	27V512T		11-SA1015-YBX
Q205	266899	TRANSISTOR 2SA1015Y	ELECTRICAL COMPONENTS	27F520T		11-SA1015-YBX
Q205	266899	TRANSISTOR 2SA1015Y	ELECTRICAL COMPONENTS	24V511T		11-SA1015-YBX
Q208	266603	TRANSISTOR 2SA817AY	ELECTRICAL COMPONENTS	27F630T		11-2SA817-AAX
Q208	266603	TRANSISTOR 2SA817AY	ELECTRICAL COMPONENTS	27V512T		11-2SA817-AAX
Q208	266603	TRANSISTOR 2SA817AY	ELECTRICAL COMPONENTS	24F512T		11-2SA817-AAX
Q208	266603	TRANSISTOR 2SA817AY	ELECTRICAL COMPONENTS	27V513T		11-2SA817-AAX
Q208	266603	TRANSISTOR 2SA817AY	ELECTRICAL COMPONENTS	24V511T		11-2SA817-AAX
Q208	266603	TRANSISTOR 2SA817AY	ELECTRICAL COMPONENTS	27V520T		11-2SA817-AAX
Q208	266603	TRANSISTOR 2SA817AY	ELECTRICAL COMPONENTS	27F520T		11-2SA817-AAX
Q209	266897	TRANSISTOR PDTC124ES (NPN)	ELECTRICAL COMPONENTS	24V511T		11-C124ES-0BX
Q209	266897	TRANSISTOR PDTC124ES (NPN)	ELECTRICAL COMPONENTS	27F520T		11-C124ES-0BX
Q209	266897	TRANSISTOR PDTC124ES (NPN)	ELECTRICAL COMPONENTS	27V513T		11-C124ES-0BX
Q209	266897	TRANSISTOR PDTC124ES (NPN)	ELECTRICAL COMPONENTS	27F630T		11-C124ES-0BX
Q209	266897	TRANSISTOR PDTC124ES (NPN)	ELECTRICAL COMPONENTS	24F512T		11-C124ES-0BX
Q209	266897	TRANSISTOR PDTC124ES (NPN)	ELECTRICAL COMPONENTS	27V520T		11-C124ES-0BX
Q209	266897	TRANSISTOR PDTC124ES (NPN)	ELECTRICAL COMPONENTS	27V512T		11-C124ES-0BX
Q401	266900	TRANSISTOR 2SC2482	ELECTRICAL COMPONENTS	27F520T		11-SC2482-0BX
Q401	266900	TRANSISTOR 2SC2482	ELECTRICAL COMPONENTS	27V513T		11-SC2482-0BX
Q401	266900	TRANSISTOR 2SC2482	ELECTRICAL COMPONENTS	24F512T		11-SC2482-0BX
Q401	266900	TRANSISTOR 2SC2482	ELECTRICAL COMPONENTS	27V512T		11-SC2482-0BX
Q401	266900	TRANSISTOR 2SC2482	ELECTRICAL COMPONENTS	27F630T		11-SC2482-0BX
Q401	266900	TRANSISTOR 2SC2482	ELECTRICAL COMPONENTS	27V520T		11-SC2482-0BX
Q401	266900	TRANSISTOR 2SC2482	ELECTRICAL COMPONENTS	24V511T		11-SC2482-0BX
Q402	266579	TRANSISTOR 2SC1815Y	ELECTRICAL COMPONENTS	27V512T		11-SC1815-YBX
Q402	266579	TRANSISTOR 2SC1815Y	ELECTRICAL COMPONENTS	27V513T		11-SC1815-YBX
Q402	266579	TRANSISTOR 2SC1815Y	ELECTRICAL COMPONENTS	27F520T		11-SC1815-YBX
Q402	266579	TRANSISTOR 2SC1815Y	ELECTRICAL COMPONENTS	27F630T		11-SC1815-YBX
Q402	266579	TRANSISTOR 2SC1815Y	ELECTRICAL COMPONENTS	24V511T		11-SC1815-YBX
Q402	266579	TRANSISTOR 2SC1815Y	ELECTRICAL COMPONENTS	24F512T		11-SC1815-YBX
Q402	266579	TRANSISTOR 2SC1815Y	ELECTRICAL COMPONENTS	27V520T		11-SC1815-YBX
Q411	268428	TRANSISTOR 3DD3402	ELECTRICAL COMPONENTS	27V512T		11-DD3402-0AX
Q411	268428	TRANSISTOR 3DD3402	ELECTRICAL COMPONENTS	27V520T		11-DD3402-0AX
Q411	268428	TRANSISTOR 3DD3402	ELECTRICAL COMPONENTS	24V511T		11-DD3402-0AX
Q411	268366	TRANSISTOR 2SD1880 (HORIZ O/P)	ELECTRICAL COMPONENTS	27F520T		11-SD1880-0AX
Q411	266903	TRANSISTOR 2SD2539 (HORIZ O/P)	ELECTRICAL COMPONENTS	24F512T		11-SD2539-0AX

Symbol	Stock	Description	Circuit	Model	TypeCode	Drawing
Q411	268366	TRANSISTOR 2SD1880 (HORIZ O/P)	ELECTRICAL COMPONENTS	27F630T		11-SD1880-0AX
Q411	268428	TRANSISTOR 3DD3402	ELECTRICAL COMPONENTS	27V513T		11-DD3402-0AX
Q412	266899	TRANSISTOR 2SA1015Y	ELECTRICAL COMPONENTS	27V512T		11-SA1015-YBX
Q412	266899	TRANSISTOR 2SA1015Y	ELECTRICAL COMPONENTS	27V513T		11-SA1015-YBX
Q412	266899	TRANSISTOR 2SA1015Y	ELECTRICAL COMPONENTS	24V511T		11-SA1015-YBX
Q412	266899	TRANSISTOR 2SA1015Y	ELECTRICAL COMPONENTS	27V520T		11-SA1015-YBX
Q412	266899	TRANSISTOR 2SA1015Y	ELECTRICAL COMPONENTS	27F520T		11-SA1015-YBX
Q412	266899	TRANSISTOR 2SA1015Y	ELECTRICAL COMPONENTS	24F512T		11-SA1015-YBX
Q412	266899	TRANSISTOR 2SA1015Y	ELECTRICAL COMPONENTS	27F630T		11-SA1015-YBX
Q413	266899	TRANSISTOR 2SA1015Y	ELECTRICAL COMPONENTS	27V520T		11-SA1015-YBX
Q413	266899	TRANSISTOR 2SA1015Y	ELECTRICAL COMPONENTS	27F520T		11-SA1015-YBX
Q413	266899	TRANSISTOR 2SA1015Y	ELECTRICAL COMPONENTS	24F512T		11-SA1015-YBX
Q413	266899	TRANSISTOR 2SA1015Y	ELECTRICAL COMPONENTS	24V511T		11-SA1015-YBX
Q413	266899	TRANSISTOR 2SA1015Y	ELECTRICAL COMPONENTS	27V513T		11-SA1015-YBX
Q413	266899	TRANSISTOR 2SA1015Y	ELECTRICAL COMPONENTS	27V512T		11-SA1015-YBX
Q413	266899	TRANSISTOR 2SA1015Y	ELECTRICAL COMPONENTS	27F630T		11-SA1015-YBX
Q414	268367	TRANSISTOR IRF630MFP	ELECTRICAL COMPONENTS	27F630T		11-630MFP-0AX
Q414	268367	TRANSISTOR IRF630MFP	ELECTRICAL COMPONENTS	24V511T		11-630MFP-0AX
Q414	268367	TRANSISTOR IRF630MFP	ELECTRICAL COMPONENTS	27F520T		11-630MFP-0AX
Q414	268367	TRANSISTOR IRF630MFP	ELECTRICAL COMPONENTS	27V520T		11-630MFP-0AX
Q414	268367	TRANSISTOR IRF630MFP	ELECTRICAL COMPONENTS	24F512T		11-630MFP-0AX
Q414	268367	TRANSISTOR IRF630MFP	ELECTRICAL COMPONENTS	27V513T		11-630MFP-0AX
Q414	268367	TRANSISTOR IRF630MFP	ELECTRICAL COMPONENTS	27V512T		11-630MFP-0AX
Q501	268368	TRANSISTOR 2SC4544	ELECTRICAL COMPONENTS	27V513T		11-SC4544-0AX
Q501	268368	TRANSISTOR 2SC4544	ELECTRICAL COMPONENTS	27F630T		11-SC4544-0AX
Q501	268368	TRANSISTOR 2SC4544	ELECTRICAL COMPONENTS	27F520T		11-SC4544-0AX
Q501	268368	TRANSISTOR 2SC4544	ELECTRICAL COMPONENTS	27V512T		11-SC4544-0AX
Q501	268368	TRANSISTOR 2SC4544	ELECTRICAL COMPONENTS	24F512T		11-SC4544-0AX
Q501	268368	TRANSISTOR 2SC4544	ELECTRICAL COMPONENTS	24V511T		11-SC4544-0AX
Q501	268368	TRANSISTOR 2SC4544	ELECTRICAL COMPONENTS	27V520T		11-SC4544-0AX
Q502	266579	TRANSISTOR 2SC1815Y	ELECTRICAL COMPONENTS	27F630T		11-SC1815-YBX
Q502	266579	TRANSISTOR 2SC1815Y	ELECTRICAL COMPONENTS	27V513T		11-SC1815-YBX
Q502	266579	TRANSISTOR 2SC1815Y	ELECTRICAL COMPONENTS	24F512T		11-SC1815-YBX
Q502	266579	TRANSISTOR 2SC1815Y	ELECTRICAL COMPONENTS	27F520T		11-SC1815-YBX
Q502	266579	TRANSISTOR 2SC1815Y	ELECTRICAL COMPONENTS	24V511T		11-SC1815-YBX
Q502	266579	TRANSISTOR 2SC1815Y	ELECTRICAL COMPONENTS	27V520T		11-SC1815-YBX
Q502	266579	TRANSISTOR 2SC1815Y	ELECTRICAL COMPONENTS	27V512T		11-SC1815-YBX
Q503	268368	TRANSISTOR 2SC4544	ELECTRICAL COMPONENTS	27V512T		11-SC4544-0AX
Q503	268368	TRANSISTOR 2SC4544	ELECTRICAL COMPONENTS	27F520T		11-SC4544-0AX
Q503	268368	TRANSISTOR 2SC4544	ELECTRICAL COMPONENTS	27F630T		11-SC4544-0AX
Q503	268368	TRANSISTOR 2SC4544	ELECTRICAL COMPONENTS	24V511T		11-SC4544-0AX
Q503	268368	TRANSISTOR 2SC4544	ELECTRICAL COMPONENTS	24F512T		11-SC4544-0AX
Q503	268368	TRANSISTOR 2SC4544	ELECTRICAL COMPONENTS	27V513T		11-SC4544-0AX
Q503	268368	TRANSISTOR 2SC4544	ELECTRICAL COMPONENTS	27V520T		11-SC4544-0AX
Q504	266579	TRANSISTOR 2SC1815Y	ELECTRICAL COMPONENTS	27F520T		11-SC1815-YBX
Q504	266579	TRANSISTOR 2SC1815Y	ELECTRICAL COMPONENTS	27F630T		11-SC1815-YBX
Q504	266579	TRANSISTOR 2SC1815Y	ELECTRICAL COMPONENTS	24F512T		11-SC1815-YBX
Q504	266579	TRANSISTOR 2SC1815Y	ELECTRICAL COMPONENTS	24V511T		11-SC1815-YBX
Q504	266579	TRANSISTOR 2SC1815Y	ELECTRICAL COMPONENTS	27V513T		11-SC1815-YBX
Q504	266579	TRANSISTOR 2SC1815Y	ELECTRICAL COMPONENTS	27V512T		11-SC1815-YBX
Q504	266579	TRANSISTOR 2SC1815Y	ELECTRICAL COMPONENTS	27V520T		11-SC1815-YBX
Q505	268368	TRANSISTOR 2SC4544	ELECTRICAL COMPONENTS	27F520T		11-SC4544-0AX
Q505	268368	TRANSISTOR 2SC4544	ELECTRICAL COMPONENTS	24F512T		11-SC4544-0AX
Q505	268368	TRANSISTOR 2SC4544	ELECTRICAL COMPONENTS	24V511T		11-SC4544-0AX
Q505	268368	TRANSISTOR 2SC4544	ELECTRICAL COMPONENTS	27V520T		11-SC4544-0AX
Q505	268368	TRANSISTOR 2SC4544	ELECTRICAL COMPONENTS	27F630T		11-SC4544-0AX
Q505	268368	TRANSISTOR 2SC4544	ELECTRICAL COMPONENTS	27V512T		11-SC4544-0AX
Q505	268368	TRANSISTOR 2SC4544	ELECTRICAL COMPONENTS	27V513T		11-SC4544-0AX
Q506	266579	TRANSISTOR 2SC1815Y	ELECTRICAL COMPONENTS	24V511T		11-SC1815-YBX
Q506	266579	TRANSISTOR 2SC1815Y	ELECTRICAL COMPONENTS	27F630T		11-SC1815-YBX

Symbol	Stock	Description	Circuit	Model	TypeCode	Drawing
Q506	266579	TRANSISTOR 2SC1815Y	ELECTRICAL COMPONENTS	24F512T		11-SC1815-YBX
Q506	266579	TRANSISTOR 2SC1815Y	ELECTRICAL COMPONENTS	27F520T		11-SC1815-YBX
Q506	266579	TRANSISTOR 2SC1815Y	ELECTRICAL COMPONENTS	27V512T		11-SC1815-YBX
Q506	266579	TRANSISTOR 2SC1815Y	ELECTRICAL COMPONENTS	27V513T		11-SC1815-YBX
Q506	266579	TRANSISTOR 2SC1815Y	ELECTRICAL COMPONENTS	27V520T		11-SC1815-YBX
Q507	268369	TRANSISTOR 2SA562TM-0	ELECTRICAL COMPONENTS	24F512T		11-A562TM-0BX
Q507	268369	TRANSISTOR 2SA562TM-0	ELECTRICAL COMPONENTS	27V520T		11-A562TM-0BX
Q507	268369	TRANSISTOR 2SA562TM-0	ELECTRICAL COMPONENTS	24V511T		11-A562TM-0BX
Q507	268369	TRANSISTOR 2SA562TM-0	ELECTRICAL COMPONENTS	27V513T		11-A562TM-0BX
Q507	268369	TRANSISTOR 2SA562TM-0	ELECTRICAL COMPONENTS	27V512T		11-A562TM-0BX
Q507	268369	TRANSISTOR 2SA562TM-0	ELECTRICAL COMPONENTS	27F630T		11-A562TM-0BX
Q507	268369	TRANSISTOR 2SA562TM-0	ELECTRICAL COMPONENTS	27F520T		11-A562TM-0BX
Q601	266579	TRANSISTOR 2SC1815Y	ELECTRICAL COMPONENTS	27V513T		11-SC1815-YBX
Q601	266579	TRANSISTOR 2SC1815Y	ELECTRICAL COMPONENTS	27V520T		11-SC1815-YBX
Q601	266579	TRANSISTOR 2SC1815Y	ELECTRICAL COMPONENTS	24V511T		11-SC1815-YBX
Q601	266579	TRANSISTOR 2SC1815Y	ELECTRICAL COMPONENTS	27F630T		11-SC1815-YBX
Q601	266579	TRANSISTOR 2SC1815Y	ELECTRICAL COMPONENTS	27F520T		11-SC1815-YBX
Q601	266579	TRANSISTOR 2SC1815Y	ELECTRICAL COMPONENTS	24F512T		11-SC1815-YBX
Q601	266579	TRANSISTOR 2SC1815Y	ELECTRICAL COMPONENTS	27V512T		11-SC1815-YBX
Q602	266899	TRANSISTOR 2SA1015Y	ELECTRICAL COMPONENTS	27V513T		11-SA1015-YBX
Q602	266899	TRANSISTOR 2SA1015Y	ELECTRICAL COMPONENTS	27V520T		11-SA1015-YBX
Q602	266899	TRANSISTOR 2SA1015Y	ELECTRICAL COMPONENTS	27F630T		11-SA1015-YBX
Q602	266899	TRANSISTOR 2SA1015Y	ELECTRICAL COMPONENTS	24F512T		11-SA1015-YBX
Q602	266899	TRANSISTOR 2SA1015Y	ELECTRICAL COMPONENTS	27V512T		11-SA1015-YBX
Q602	266899	TRANSISTOR 2SA1015Y	ELECTRICAL COMPONENTS	27F520T		11-SA1015-YBX
Q602	266899	TRANSISTOR 2SA1015Y	ELECTRICAL COMPONENTS	24V511T		11-SA1015-YBX
Q603	266897	TRANSISTOR PDTC124ES (NPN)	ELECTRICAL COMPONENTS	27V512T		11-C124ES-0BX
Q603	266897	TRANSISTOR PDTC124ES (NPN)	ELECTRICAL COMPONENTS	27V513T		11-C124ES-0BX
Q603	266897	TRANSISTOR PDTC124ES (NPN)	ELECTRICAL COMPONENTS	24F512T		11-C124ES-0BX
Q603	266897	TRANSISTOR PDTC124ES (NPN)	ELECTRICAL COMPONENTS	27F520T		11-C124ES-0BX
Q603	266897	TRANSISTOR PDTC124ES (NPN)	ELECTRICAL COMPONENTS	24V511T		11-C124ES-0BX
Q603	266897	TRANSISTOR PDTC124ES (NPN)	ELECTRICAL COMPONENTS	27V520T		11-C124ES-0BX
Q603	266897	TRANSISTOR PDTC124ES (NPN)	ELECTRICAL COMPONENTS	27F630T		11-C124ES-0BX
Q820	268370	TRANSISTOR 2SC2230Y	ELECTRICAL COMPONENTS	27F630T		11-SC2230-YBX
Q820	268370	TRANSISTOR 2SC2230Y	ELECTRICAL COMPONENTS	27V513T		11-SC2230-YBX
Q820	268370	TRANSISTOR 2SC2230Y	ELECTRICAL COMPONENTS	24V511T		11-SC2230-YBX
Q820	268370	TRANSISTOR 2SC2230Y	ELECTRICAL COMPONENTS	27V520T		11-SC2230-YBX
Q820	268370	TRANSISTOR 2SC2230Y	ELECTRICAL COMPONENTS	27V512T		11-SC2230-YBX
Q820	268370	TRANSISTOR 2SC2230Y	ELECTRICAL COMPONENTS	24F512T		11-SC2230-YBX
Q820	268370	TRANSISTOR 2SC2230Y	ELECTRICAL COMPONENTS	27F520T		11-SC2230-YBX
Q821	268368	TRANSISTOR 2SC4544	ELECTRICAL COMPONENTS	27V512T		11-SC4544-0AX
Q821	268368	TRANSISTOR 2SC4544	ELECTRICAL COMPONENTS	24V511T		11-SC4544-0AX
Q821	268368	TRANSISTOR 2SC4544	ELECTRICAL COMPONENTS	27V520T		11-SC4544-0AX
Q821	268368	TRANSISTOR 2SC4544	ELECTRICAL COMPONENTS	27V513T		11-SC4544-0AX
Q821	268368	TRANSISTOR 2SC4544	ELECTRICAL COMPONENTS	24F512T		11-SC4544-0AX
Q821	268368	TRANSISTOR 2SC4544	ELECTRICAL COMPONENTS	27F630T		11-SC4544-0AX
Q821	268368	TRANSISTOR 2SC4544	ELECTRICAL COMPONENTS	27F520T		11-SC4544-0AX
Q822	266579	TRANSISTOR 2SC1815Y	ELECTRICAL COMPONENTS	27V520T		11-SC1815-YBX
Q822	266579	TRANSISTOR 2SC1815Y	ELECTRICAL COMPONENTS	27V513T		11-SC1815-YBX
Q822	266579	TRANSISTOR 2SC1815Y	ELECTRICAL COMPONENTS	27F630T		11-SC1815-YBX
Q822	266579	TRANSISTOR 2SC1815Y	ELECTRICAL COMPONENTS	27V512T		11-SC1815-YBX
Q822	266579	TRANSISTOR 2SC1815Y	ELECTRICAL COMPONENTS	24F512T		11-SC1815-YBX
Q822	266579	TRANSISTOR 2SC1815Y	ELECTRICAL COMPONENTS	24V511T		11-SC1815-YBX
Q822	266579	TRANSISTOR 2SC1815Y	ELECTRICAL COMPONENTS	27F520T		11-SC1815-YBX
Q823	266579	TRANSISTOR 2SC1815Y	ELECTRICAL COMPONENTS	27V520T		11-SC1815-YBX
Q823	266579	TRANSISTOR 2SC1815Y	ELECTRICAL COMPONENTS	27V513T		11-SC1815-YBX
Q823	266579	TRANSISTOR 2SC1815Y	ELECTRICAL COMPONENTS	24F512T		11-SC1815-YBX
Q823	266579	TRANSISTOR 2SC1815Y	ELECTRICAL COMPONENTS	27V512T		11-SC1815-YBX
Q823	266579	TRANSISTOR 2SC1815Y	ELECTRICAL COMPONENTS	24V511T		11-SC1815-YBX
Q823	266579	TRANSISTOR 2SC1815Y	ELECTRICAL COMPONENTS	27F520T		11-SC1815-YBX

Symbol	Stock	Description	Circuit	Model	TypeCode	Drawing
Q823	266579	TRANSISTOR 2SC1815Y	ELECTRICAL COMPONENTS	27F630T		11-SC1815-YBX
Q824	266579	TRANSISTOR 2SC1815Y	ELECTRICAL COMPONENTS	24V511T		11-SC1815-YBX
Q824	266579	TRANSISTOR 2SC1815Y	ELECTRICAL COMPONENTS	27F630T		11-SC1815-YBX
Q824	266579	TRANSISTOR 2SC1815Y	ELECTRICAL COMPONENTS	27V512T		11-SC1815-YBX
Q824	266579	TRANSISTOR 2SC1815Y	ELECTRICAL COMPONENTS	24F512T		11-SC1815-YBX
Q824	266579	TRANSISTOR 2SC1815Y	ELECTRICAL COMPONENTS	27V513T		11-SC1815-YBX
Q824	266579	TRANSISTOR 2SC1815Y	ELECTRICAL COMPONENTS	27F520T		11-SC1815-YBX
Q824	266579	TRANSISTOR 2SC1815Y	ELECTRICAL COMPONENTS	27V520T		11-SC1815-YBX
Q825	266579	TRANSISTOR 2SC1815Y	ELECTRICAL COMPONENTS	27F630T		11-SC1815-YBX
Q825	266579	TRANSISTOR 2SC1815Y	ELECTRICAL COMPONENTS	27V520T		11-SC1815-YBX
Q825	266579	TRANSISTOR 2SC1815Y	ELECTRICAL COMPONENTS	24V511T		11-SC1815-YBX
Q825	266579	TRANSISTOR 2SC1815Y	ELECTRICAL COMPONENTS	27F520T		11-SC1815-YBX
Q825	266579	TRANSISTOR 2SC1815Y	ELECTRICAL COMPONENTS	27V512T		11-SC1815-YBX
Q825	266579	TRANSISTOR 2SC1815Y	ELECTRICAL COMPONENTS	24F512T		11-SC1815-YBX
Q825	266579	TRANSISTOR 2SC1815Y	ELECTRICAL COMPONENTS	27V513T		11-SC1815-YBX
Q901	266579	TRANSISTOR 2SC1815Y	ELECTRICAL COMPONENTS	27F630T		11-SC1815-YBX
Q901	266579	TRANSISTOR 2SC1815Y	ELECTRICAL COMPONENTS	24V511T		11-SC1815-YBX
Q901	266579	TRANSISTOR 2SC1815Y	ELECTRICAL COMPONENTS	27F520T		11-SC1815-YBX
Q901	266579	TRANSISTOR 2SC1815Y	ELECTRICAL COMPONENTS	27V512T		11-SC1815-YBX
Q901	266579	TRANSISTOR 2SC1815Y	ELECTRICAL COMPONENTS	27V520T		11-SC1815-YBX
Q901	266579	TRANSISTOR 2SC1815Y	ELECTRICAL COMPONENTS	27V513T		11-SC1815-YBX
Q901	266579	TRANSISTOR 2SC1815Y	ELECTRICAL COMPONENTS	24F512T		11-SC1815-YBX
Q902	266579	TRANSISTOR 2SC1815Y	ELECTRICAL COMPONENTS	27V513T		11-SC1815-YBX
Q902	266579	TRANSISTOR 2SC1815Y	ELECTRICAL COMPONENTS	24F512T		11-SC1815-YBX
Q902	266579	TRANSISTOR 2SC1815Y	ELECTRICAL COMPONENTS	27F630T		11-SC1815-YBX
Q902	266579	TRANSISTOR 2SC1815Y	ELECTRICAL COMPONENTS	27V520T		11-SC1815-YBX
Q902	266579	TRANSISTOR 2SC1815Y	ELECTRICAL COMPONENTS	27V512T		11-SC1815-YBX
Q902	266579	TRANSISTOR 2SC1815Y	ELECTRICAL COMPONENTS	27F520T		11-SC1815-YBX
Q902	266579	TRANSISTOR 2SC1815Y	ELECTRICAL COMPONENTS	24V511T		11-SC1815-YBX
Q903	266579	TRANSISTOR 2SC1815Y	ELECTRICAL COMPONENTS	27V520T		11-SC1815-YBX
Q903	266579	TRANSISTOR 2SC1815Y	ELECTRICAL COMPONENTS	27V512T		11-SC1815-YBX
Q903	266579	TRANSISTOR 2SC1815Y	ELECTRICAL COMPONENTS	24F512T		11-SC1815-YBX
Q903	266579	TRANSISTOR 2SC1815Y	ELECTRICAL COMPONENTS	24V511T		11-SC1815-YBX
Q903	266579	TRANSISTOR 2SC1815Y	ELECTRICAL COMPONENTS	27V513T		11-SC1815-YBX
Q903	266579	TRANSISTOR 2SC1815Y	ELECTRICAL COMPONENTS	27F630T		11-SC1815-YBX
Q903	266579	TRANSISTOR 2SC1815Y	ELECTRICAL COMPONENTS	27F520T		11-SC1815-YBX
Q904	266579	TRANSISTOR 2SC1815Y	ELECTRICAL COMPONENTS	27F630T		11-SC1815-YBX
Q904	266579	TRANSISTOR 2SC1815Y	ELECTRICAL COMPONENTS	27V513T		11-SC1815-YBX
Q904	266579	TRANSISTOR 2SC1815Y	ELECTRICAL COMPONENTS	27V520T		11-SC1815-YBX
Q904	266579	TRANSISTOR 2SC1815Y	ELECTRICAL COMPONENTS	24F512T		11-SC1815-YBX
Q904	266579	TRANSISTOR 2SC1815Y	ELECTRICAL COMPONENTS	24V511T		11-SC1815-YBX
Q904	266579	TRANSISTOR 2SC1815Y	ELECTRICAL COMPONENTS	27F520T		11-SC1815-YBX
Q904	266579	TRANSISTOR 2SC1815Y	ELECTRICAL COMPONENTS	27V512T		11-SC1815-YBX
Q911	266579	TRANSISTOR 2SC1815Y	ELECTRICAL COMPONENTS	27F520T		11-SC1815-YBX
Q911	266579	TRANSISTOR 2SC1815Y	ELECTRICAL COMPONENTS	27V520T		11-SC1815-YBX
Q911	266579	TRANSISTOR 2SC1815Y	ELECTRICAL COMPONENTS	27F630T		11-SC1815-YBX
Q911	266579	TRANSISTOR 2SC1815Y	ELECTRICAL COMPONENTS	24V511T		11-SC1815-YBX
Q911	266579	TRANSISTOR 2SC1815Y	ELECTRICAL COMPONENTS	24F512T		11-SC1815-YBX
Q912	266899	TRANSISTOR 2SA1015Y	ELECTRICAL COMPONENTS	27F520T		11-SA1015-YBX
Q912	266899	TRANSISTOR 2SA1015Y	ELECTRICAL COMPONENTS	27V520T		11-SA1015-YBX
Q912	266899	TRANSISTOR 2SA1015Y	ELECTRICAL COMPONENTS	24F512T		11-SA1015-YBX
Q912	266899	TRANSISTOR 2SA1015Y	ELECTRICAL COMPONENTS	27F630T		11-SA1015-YBX
Q912	266899	TRANSISTOR 2SA1015Y	ELECTRICAL COMPONENTS	24V511T		11-SA1015-YBX
Q913	266579	TRANSISTOR 2SC1815Y	ELECTRICAL COMPONENTS	27V520T		11-SC1815-YBX
Q913	266579	TRANSISTOR 2SC1815Y	ELECTRICAL COMPONENTS	27F630T		11-SC1815-YBX
Q913	266579	TRANSISTOR 2SC1815Y	ELECTRICAL COMPONENTS	24V511T		11-SC1815-YBX
Q913	266579	TRANSISTOR 2SC1815Y	ELECTRICAL COMPONENTS	27F520T		11-SC1815-YBX
Q913	266579	TRANSISTOR 2SC1815Y	ELECTRICAL COMPONENTS	24F512T		11-SC1815-YBX
Q914	266579	TRANSISTOR 2SC1815Y	ELECTRICAL COMPONENTS	24F512T		11-SC1815-YBX
Q914	266579	TRANSISTOR 2SC1815Y	ELECTRICAL COMPONENTS	27V520T		11-SC1815-YBX

Symbol	Stock	Description	Circuit	Model	TypeCode	Drawing
Q914	266579	TRANSISTOR 2SC1815Y	ELECTRICAL COMPONENTS	27F630T		11-SC1815-YBX
Q914	266579	TRANSISTOR 2SC1815Y	ELECTRICAL COMPONENTS	24V511T		11-SC1815-YBX
Q914	266579	TRANSISTOR 2SC1815Y	ELECTRICAL COMPONENTS	27F520T		11-SC1815-YBX
Q917	266579	TRANSISTOR 2SC1815Y	ELECTRICAL COMPONENTS	24F512T		11-SC1815-YBX
Q917	266579	TRANSISTOR 2SC1815Y	ELECTRICAL COMPONENTS	27V520T		11-SC1815-YBX
Q917	266579	TRANSISTOR 2SC1815Y	ELECTRICAL COMPONENTS	27F630T		11-SC1815-YBX
Q917	266579	TRANSISTOR 2SC1815Y	ELECTRICAL COMPONENTS	27F520T		11-SC1815-YBX
Q917	266579	TRANSISTOR 2SC1815Y	ELECTRICAL COMPONENTS	27V513T		11-SC1815-YBX
Q917	266579	TRANSISTOR 2SC1815Y	ELECTRICAL COMPONENTS	24V511T		11-SC1815-YBX
Q917	266579	TRANSISTOR 2SC1815Y	ELECTRICAL COMPONENTS	27V512T		11-SC1815-YBX
Q918	266897	TRANSISTOR PDTC124ES (NPN)	ELECTRICAL COMPONENTS	27V520T		11-C124ES-0BX
Q918	266897	TRANSISTOR PDTC124ES (NPN)	ELECTRICAL COMPONENTS	24V511T		11-C124ES-0BX
Q918	266897	TRANSISTOR PDTC124ES (NPN)	ELECTRICAL COMPONENTS	27V512T		11-C124ES-0BX
Q918	266897	TRANSISTOR PDTC124ES (NPN)	ELECTRICAL COMPONENTS	27F520T		11-C124ES-0BX
Q918	266897	TRANSISTOR PDTC124ES (NPN)	ELECTRICAL COMPONENTS	24F512T		11-C124ES-0BX
Q918	266897	TRANSISTOR PDTC124ES (NPN)	ELECTRICAL COMPONENTS	27V513T		11-C124ES-0BX
Q918	266897	TRANSISTOR PDTC124ES (NPN)	ELECTRICAL COMPONENTS	27F630T		11-C124ES-0BX
Q919	266897	TRANSISTOR PDTC124ES (NPN)	ELECTRICAL COMPONENTS	27V512T		11-C124ES-0BX
Q919	266897	TRANSISTOR PDTC124ES (NPN)	ELECTRICAL COMPONENTS	24V511T		11-C124ES-0BX
Q919	266897	TRANSISTOR PDTC124ES (NPN)	ELECTRICAL COMPONENTS	27V520T		11-C124ES-0BX
Q919	266897	TRANSISTOR PDTC124ES (NPN)	ELECTRICAL COMPONENTS	27F630T		11-C124ES-0BX
Q919	266897	TRANSISTOR PDTC124ES (NPN)	ELECTRICAL COMPONENTS	27V513T		11-C124ES-0BX
Q919	266897	TRANSISTOR PDTC124ES (NPN)	ELECTRICAL COMPONENTS	27F520T		11-C124ES-0BX
Q919	266897	TRANSISTOR PDTC124ES (NPN)	ELECTRICAL COMPONENTS	24F512T		11-C124ES-0BX
R001	266322	RES. C.F. 10K OHM 1/6W +/-5%	ELECTRICAL COMPONENTS	27V513T		18-CB0103-JNX
R001	266322	RES. C.F. 10K OHM 1/6W +/-5%	ELECTRICAL COMPONENTS	27V512T		18-CB0103-JNX
R001	266322	RES. C.F. 10K OHM 1/6W +/-5%	ELECTRICAL COMPONENTS	24V511T		18-CB0103-JNX
R001	266322	RES. C.F. 10K OHM 1/6W +/-5%	ELECTRICAL COMPONENTS	27F520T		18-CB0103-JNX
R001	266322	RES. C.F. 10K OHM 1/6W +/-5%	ELECTRICAL COMPONENTS	27F630T		18-CB0103-JNX
R001	266322	RES. C.F. 10K OHM 1/6W +/-5%	ELECTRICAL COMPONENTS	24F512T		18-CB0103-JNX
R001	266322	RES. C.F. 10K OHM 1/6W +/-5%	ELECTRICAL COMPONENTS	27V520T		18-CB0103-JNX
R003	266255	RES. C.F. 1K OHM 1/6W +/-5%	ELECTRICAL COMPONENTS	24F512T		18-CB0102-JNX
R003	266255	RES. C.F. 1K OHM 1/6W +/-5%	ELECTRICAL COMPONENTS	27F630T		18-CB0102-JNX
R003	266255	RES. C.F. 1K OHM 1/6W +/-5%	ELECTRICAL COMPONENTS	27V513T		18-CB0102-JNX
R003	266255	RES. C.F. 1K OHM 1/6W +/-5%	ELECTRICAL COMPONENTS	27V512T		18-CB0102-JNX
R003	266255	RES. C.F. 1K OHM 1/6W +/-5%	ELECTRICAL COMPONENTS	27V520T		18-CB0102-JNX
R003	266255	RES. C.F. 1K OHM 1/6W +/-5%	ELECTRICAL COMPONENTS	24V511T		18-CB0102-JNX
R003	266255	RES. C.F. 1K OHM 1/6W +/-5%	ELECTRICAL COMPONENTS	27F520T		18-CB0102-JNX
R004	266255	RES. C.F. 1K OHM 1/6W +/-5%	ELECTRICAL COMPONENTS	27F520T		18-CB0102-JNX
R004	266255	RES. C.F. 1K OHM 1/6W +/-5%	ELECTRICAL COMPONENTS	24F512T		18-CB0102-JNX
R004	266255	RES. C.F. 1K OHM 1/6W +/-5%	ELECTRICAL COMPONENTS	27V513T		18-CB0102-JNX
R004	266255	RES. C.F. 1K OHM 1/6W +/-5%	ELECTRICAL COMPONENTS	27F630T		18-CB0102-JNX
R004	266255	RES. C.F. 1K OHM 1/6W +/-5%	ELECTRICAL COMPONENTS	24V511T		18-CB0102-JNX
R004	266255	RES. C.F. 1K OHM 1/6W +/-5%	ELECTRICAL COMPONENTS	27V512T		18-CB0102-JNX
R004	266255	RES. C.F. 1K OHM 1/6W +/-5%	ELECTRICAL COMPONENTS	27V520T		18-CB0102-JNX
R005	266285	RES. C.F. 4.7K OHM 1/6W +/-5%	ELECTRICAL COMPONENTS	27V512T		18-CB0472-JNX
R005	266285	RES. C.F. 4.7K OHM 1/6W +/-5%	ELECTRICAL COMPONENTS	27F520T		18-CB0472-JNX
R005	266285	RES. C.F. 4.7K OHM 1/6W +/-5%	ELECTRICAL COMPONENTS	27V520T		18-CB0472-JNX
R005	266285	RES. C.F. 4.7K OHM 1/6W +/-5%	ELECTRICAL COMPONENTS	27F630T		18-CB0472-JNX
R005	266285	RES. C.F. 4.7K OHM 1/6W +/-5%	ELECTRICAL COMPONENTS	27V513T		18-CB0472-JNX
R005	266285	RES. C.F. 4.7K OHM 1/6W +/-5%	ELECTRICAL COMPONENTS	24F512T		18-CB0472-JNX
R005	266285	RES. C.F. 4.7K OHM 1/6W +/-5%	ELECTRICAL COMPONENTS	24V511T		18-CB0472-JNX
R006	266285	RES. C.F. 4.7K OHM 1/6W +/-5%	ELECTRICAL COMPONENTS	24V511T		18-CB0472-JNX
R006	266285	RES. C.F. 4.7K OHM 1/6W +/-5%	ELECTRICAL COMPONENTS	27V512T		18-CB0472-JNX
R006	266285	RES. C.F. 4.7K OHM 1/6W +/-5%	ELECTRICAL COMPONENTS	24F512T		18-CB0472-JNX
R006	266285	RES. C.F. 4.7K OHM 1/6W +/-5%	ELECTRICAL COMPONENTS	27F520T		18-CB0472-JNX
R006	266285	RES. C.F. 4.7K OHM 1/6W +/-5%	ELECTRICAL COMPONENTS	27V520T		18-CB0472-JNX
R006	266285	RES. C.F. 4.7K OHM 1/6W +/-5%	ELECTRICAL COMPONENTS	27V513T		18-CB0472-JNX
R006	266285	RES. C.F. 4.7K OHM 1/6W +/-5%	ELECTRICAL COMPONENTS	27F630T		18-CB0472-JNX
R01	266285	RES. C.F. 4.7K OHM 1/6W +/-5%	ELECTRICAL COMPONENTS	24V511T		18-CB0472-JNX

Symbol	Stock	Description	Circuit	Model	TypeCode	Drawing
R01	266285	RES. C.F. 4.7K OHM 1/6W +/-5%	ELECTRICAL COMPONENTS	27V520T		18-CB0472-JNX
R01	266285	RES. C.F. 4.7K OHM 1/6W +/-5%	ELECTRICAL COMPONENTS	27V512T		18-CB0472-JNX
R01	266285	RES. C.F. 4.7K OHM 1/6W +/-5%	ELECTRICAL COMPONENTS	27F520T		18-CB0472-JNX
R01	266285	RES. C.F. 4.7K OHM 1/6W +/-5%	ELECTRICAL COMPONENTS	27F630T		18-CB0472-JNX
R01	266285	RES. C.F. 4.7K OHM 1/6W +/-5%	ELECTRICAL COMPONENTS	27V513T		18-CB0472-JNX
R01	266285	RES. C.F. 4.7K OHM 1/6W +/-5%	ELECTRICAL COMPONENTS	24F512T		18-CB0472-JNX
R010	266370	RES. C.F. 470 OHM 1/6W +/-5%	ELECTRICAL COMPONENTS	27V520T		18-CB0471-JNX
R010	266285	RES. C.F. 4.7K OHM 1/6W +/-5%	ELECTRICAL COMPONENTS	24F512T		18-CB0472-JNX
R010	266370	RES. C.F. 470 OHM 1/6W +/-5%	ELECTRICAL COMPONENTS	27F630T		18-CB0471-JNX
R010	266370	RES. C.F. 470 OHM 1/6W +/-5%	ELECTRICAL COMPONENTS	27V513T		18-CB0471-JNX
R010	266370	RES. C.F. 470 OHM 1/6W +/-5%	ELECTRICAL COMPONENTS	27F520T		18-CB0471-JNX
R010	266370	RES. C.F. 470 OHM 1/6W +/-5%	ELECTRICAL COMPONENTS	27V512T		18-CB0471-JNX
R010	266285	RES. C.F. 4.7K OHM 1/6W +/-5%	ELECTRICAL COMPONENTS	24V511T		18-CB0472-JNX
R02	268371	RES. C.F. 27K OHM 1/6W +/-5%	ELECTRICAL COMPONENTS	27V520T		18-CB0273-JNX
R02	268371	RES. C.F. 27K OHM 1/6W +/-5%	ELECTRICAL COMPONENTS	27F520T		18-CB0273-JNX
R02	268371	RES. C.F. 27K OHM 1/6W +/-5%	ELECTRICAL COMPONENTS	27F630T		18-CB0273-JNX
R02	268371	RES. C.F. 27K OHM 1/6W +/-5%	ELECTRICAL COMPONENTS	24F512T		18-CB0273-JNX
R02	268371	RES. C.F. 27K OHM 1/6W +/-5%	ELECTRICAL COMPONENTS	27V513T		18-CB0273-JNX
R02	268371	RES. C.F. 27K OHM 1/6W +/-5%	ELECTRICAL COMPONENTS	24V511T		18-CB0273-JNX
R02	268371	RES. C.F. 27K OHM 1/6W +/-5%	ELECTRICAL COMPONENTS	27V512T		18-CB0273-JNX
R023	266253	RES. C.F. 100 OHM 1/6W +/-5%	ELECTRICAL COMPONENTS	24F512T		18-CB0101-JNX
R023A	266344	RES. C.F. 1.5K OHM 1/6W +/-5%	ELECTRICAL COMPONENTS	24F512T		18-CB0152-JNX
R023A	266344	RES. C.F. 1.5K OHM 1/6W +/-5%	ELECTRICAL COMPONENTS	27V513T		18-CB0152-JNX
R023A	266344	RES. C.F. 1.5K OHM 1/6W +/-5%	ELECTRICAL COMPONENTS	27F630T		18-CB0152-JNX
R023A	266344	RES. C.F. 1.5K OHM 1/6W +/-5%	ELECTRICAL COMPONENTS	27V512T		18-CB0152-JNX
R023A	266344	RES. C.F. 1.5K OHM 1/6W +/-5%	ELECTRICAL COMPONENTS	27F520T		18-CB0152-JNX
R023A	266344	RES. C.F. 1.5K OHM 1/6W +/-5%	ELECTRICAL COMPONENTS	27V520T		18-CB0152-JNX
R023A	266344	RES. C.F. 1.5K OHM 1/6W +/-5%	ELECTRICAL COMPONENTS	24V511T		18-CB0152-JNX
R024	266325	RES. C.F. 47 OHM 1/6W +/-5%	ELECTRICAL COMPONENTS	27V513T		18-CB0470-JNX
R024	266325	RES. C.F. 47 OHM 1/6W +/-5%	ELECTRICAL COMPONENTS	27V512T		18-CB0470-JNX
R024	266325	RES. C.F. 47 OHM 1/6W +/-5%	ELECTRICAL COMPONENTS	27F630T		18-CB0470-JNX
R024	266325	RES. C.F. 47 OHM 1/6W +/-5%	ELECTRICAL COMPONENTS	27V520T		18-CB0470-JNX
R024	266325	RES. C.F. 47 OHM 1/6W +/-5%	ELECTRICAL COMPONENTS	27F520T		18-CB0470-JNX
R024	266325	RES. C.F. 47 OHM 1/6W +/-5%	ELECTRICAL COMPONENTS	24F512T		18-CB0470-JNX
R024	266325	RES. C.F. 47 OHM 1/6W +/-5%	ELECTRICAL COMPONENTS	24V511T		18-CB0470-JNX
R024A	266367	RES. C.F. 1.8K OHM 1/6W +/-5%	ELECTRICAL COMPONENTS	27V520T		18-CB0182-JNX
R024A	266367	RES. C.F. 1.8K OHM 1/6W +/-5%	ELECTRICAL COMPONENTS	24F512T		18-CB0182-JNX
R024A	266367	RES. C.F. 1.8K OHM 1/6W +/-5%	ELECTRICAL COMPONENTS	27V513T		18-CB0182-JNX
R024A	266367	RES. C.F. 1.8K OHM 1/6W +/-5%	ELECTRICAL COMPONENTS	27V512T		18-CB0182-JNX
R024A	266367	RES. C.F. 1.8K OHM 1/6W +/-5%	ELECTRICAL COMPONENTS	24V511T		18-CB0182-JNX
R024A	266367	RES. C.F. 1.8K OHM 1/6W +/-5%	ELECTRICAL COMPONENTS	27F520T		18-CB0182-JNX
R024A	266367	RES. C.F. 1.8K OHM 1/6W +/-5%	ELECTRICAL COMPONENTS	27F630T		18-CB0182-JNX
R025	266322	RES. C.F. 10K OHM 1/6W +/-5%	ELECTRICAL COMPONENTS	27F520T		18-CB0103-JNX
R025	266322	RES. C.F. 10K OHM 1/6W +/-5%	ELECTRICAL COMPONENTS	27V520T		18-CB0103-JNX
R025	266322	RES. C.F. 10K OHM 1/6W +/-5%	ELECTRICAL COMPONENTS	24V511T		18-CB0103-JNX
R025	266322	RES. C.F. 10K OHM 1/6W +/-5%	ELECTRICAL COMPONENTS	27V512T		18-CB0103-JNX
R025	266322	RES. C.F. 10K OHM 1/6W +/-5%	ELECTRICAL COMPONENTS	24F512T		18-CB0103-JNX
R025	266322	RES. C.F. 10K OHM 1/6W +/-5%	ELECTRICAL COMPONENTS	27F630T		18-CB0103-JNX
R025	266322	RES. C.F. 10K OHM 1/6W +/-5%	ELECTRICAL COMPONENTS	27V513T		18-CB0103-JNX
R025A	266366	RES. C.F. 2.7K OHM 1/6W +/-5%	ELECTRICAL COMPONENTS	24V511T		18-CB0272-JNX
R025A	266366	RES. C.F. 2.7K OHM 1/6W +/-5%	ELECTRICAL COMPONENTS	27F520T		18-CB0272-JNX
R025A	266366	RES. C.F. 2.7K OHM 1/6W +/-5%	ELECTRICAL COMPONENTS	27F630T		18-CB0272-JNX
R025A	266366	RES. C.F. 2.7K OHM 1/6W +/-5%	ELECTRICAL COMPONENTS	27V512T		18-CB0272-JNX
R025A	266366	RES. C.F. 2.7K OHM 1/6W +/-5%	ELECTRICAL COMPONENTS	27V513T		18-CB0272-JNX
R025A	266366	RES. C.F. 2.7K OHM 1/6W +/-5%	ELECTRICAL COMPONENTS	27V520T		18-CB0272-JNX
R025A	266366	RES. C.F. 2.7K OHM 1/6W +/-5%	ELECTRICAL COMPONENTS	24F512T		18-CB0272-JNX
R026	266322	RES. C.F. 10K OHM 1/6W +/-5%	ELECTRICAL COMPONENTS	24F512T		18-CB0103-JNX
R026	266322	RES. C.F. 10K OHM 1/6W +/-5%	ELECTRICAL COMPONENTS	27F520T		18-CB0103-JNX
R026	266322	RES. C.F. 10K OHM 1/6W +/-5%	ELECTRICAL COMPONENTS	27F630T		18-CB0103-JNX
R026	266322	RES. C.F. 10K OHM 1/6W +/-5%	ELECTRICAL COMPONENTS	27V513T		18-CB0103-JNX

Symbol	Stock	Description	Circuit	Model	TypeCode	Drawing
R026	266322	RES. C.F. 10K OHM 1/6W +/-5%	ELECTRICAL COMPONENTS	27V520T		18-CB0103-JNX
R026	266322	RES. C.F. 10K OHM 1/6W +/-5%	ELECTRICAL COMPONENTS	24V511T		18-CB0103-JNX
R026	266322	RES. C.F. 10K OHM 1/6W +/-5%	ELECTRICAL COMPONENTS	27V512T		18-CB0103-JNX
R026A	266374	RES. C.F. 4.3K OHM 1/6W +/-5%	ELECTRICAL COMPONENTS	27V520T		18-CB0432-JNX
R026A	266374	RES. C.F. 4.3K OHM 1/6W +/-5%	ELECTRICAL COMPONENTS	27V512T		18-CB0432-JNX
R026A	266374	RES. C.F. 4.3K OHM 1/6W +/-5%	ELECTRICAL COMPONENTS	27F520T		18-CB0432-JNX
R026A	266374	RES. C.F. 4.3K OHM 1/6W +/-5%	ELECTRICAL COMPONENTS	24V511T		18-CB0432-JNX
R026A	266374	RES. C.F. 4.3K OHM 1/6W +/-5%	ELECTRICAL COMPONENTS	27F630T		18-CB0432-JNX
R026A	266374	RES. C.F. 4.3K OHM 1/6W +/-5%	ELECTRICAL COMPONENTS	27V513T		18-CB0432-JNX
R026A	266374	RES. C.F. 4.3K OHM 1/6W +/-5%	ELECTRICAL COMPONENTS	24F512T		18-CB0432-JNX
R027A	268372	RES. C.F. 6.2K OHM 1/6W +/-5%	ELECTRICAL COMPONENTS	27F630T		18-CB0622-JNX
R027A	268372	RES. C.F. 6.2K OHM 1/6W +/-5%	ELECTRICAL COMPONENTS	24F512T		18-CB0622-JNX
R027A	268372	RES. C.F. 6.2K OHM 1/6W +/-5%	ELECTRICAL COMPONENTS	24V511T		18-CB0622-JNX
R027A	268372	RES. C.F. 6.2K OHM 1/6W +/-5%	ELECTRICAL COMPONENTS	27V512T		18-CB0622-JNX
R027A	268372	RES. C.F. 6.2K OHM 1/6W +/-5%	ELECTRICAL COMPONENTS	27V513T		18-CB0622-JNX
R027A	268372	RES. C.F. 6.2K OHM 1/6W +/-5%	ELECTRICAL COMPONENTS	27V520T		18-CB0622-JNX
R027A	268372	RES. C.F. 6.2K OHM 1/6W +/-5%	ELECTRICAL COMPONENTS	27F520T		18-CB0622-JNX
R030	268373	RES. C.F. 4.7 OHM 1/4W +/-5%	ELECTRICAL COMPONENTS	27V520T		18-CD0479-JNX
R030	268373	RES. C.F. 4.7 OHM 1/4W +/-5%	ELECTRICAL COMPONENTS	27F630T		18-CD0479-JNX
R030	268373	RES. C.F. 4.7 OHM 1/4W +/-5%	ELECTRICAL COMPONENTS	24F512T		18-CD0479-JNX
R030	268373	RES. C.F. 4.7 OHM 1/4W +/-5%	ELECTRICAL COMPONENTS	27V513T		18-CD0479-JNX
R030	268373	RES. C.F. 4.7 OHM 1/4W +/-5%	ELECTRICAL COMPONENTS	27V512T		18-CD0479-JNX
R030	268373	RES. C.F. 4.7 OHM 1/4W +/-5%	ELECTRICAL COMPONENTS	27F520T		18-CD0479-JNX
R030	268373	RES. C.F. 4.7 OHM 1/4W +/-5%	ELECTRICAL COMPONENTS	24V511T		18-CD0479-JNX
R031	266255	RES. C.F. 1K OHM 1/6W +/-5%	ELECTRICAL COMPONENTS	27V520T		18-CB0102-JNX
R031	266255	RES. C.F. 1K OHM 1/6W +/-5%	ELECTRICAL COMPONENTS	24F512T		18-CB0102-JNX
R031	266255	RES. C.F. 1K OHM 1/6W +/-5%	ELECTRICAL COMPONENTS	27F630T		18-CB0102-JNX
R031	266255	RES. C.F. 1K OHM 1/6W +/-5%	ELECTRICAL COMPONENTS	27V513T		18-CB0102-JNX
R031	266255	RES. C.F. 1K OHM 1/6W +/-5%	ELECTRICAL COMPONENTS	27V512T		18-CB0102-JNX
R031	266255	RES. C.F. 1K OHM 1/6W +/-5%	ELECTRICAL COMPONENTS	27F520T		18-CB0102-JNX
R031	266255	RES. C.F. 1K OHM 1/6W +/-5%	ELECTRICAL COMPONENTS	24V511T		18-CB0102-JNX
R032	266255	RES. C.F. 1K OHM 1/6W +/-5%	ELECTRICAL COMPONENTS	27V512T		18-CB0102-JNX
R032	266255	RES. C.F. 1K OHM 1/6W +/-5%	ELECTRICAL COMPONENTS	24F512T		18-CB0102-JNX
R032	266255	RES. C.F. 1K OHM 1/6W +/-5%	ELECTRICAL COMPONENTS	27F630T		18-CB0102-JNX
R032	266255	RES. C.F. 1K OHM 1/6W +/-5%	ELECTRICAL COMPONENTS	27F520T		18-CB0102-JNX
R032	266255	RES. C.F. 1K OHM 1/6W +/-5%	ELECTRICAL COMPONENTS	27V520T		18-CB0102-JNX
R032	266255	RES. C.F. 1K OHM 1/6W +/-5%	ELECTRICAL COMPONENTS	24V511T		18-CB0102-JNX
R032	266255	RES. C.F. 1K OHM 1/6W +/-5%	ELECTRICAL COMPONENTS	27V513T		18-CB0102-JNX
R033	266255	RES. C.F. 1K OHM 1/6W +/-5%	ELECTRICAL COMPONENTS	24F512T		18-CB0102-JNX
R033	266255	RES. C.F. 1K OHM 1/6W +/-5%	ELECTRICAL COMPONENTS	27V513T		18-CB0102-JNX
R033	266255	RES. C.F. 1K OHM 1/6W +/-5%	ELECTRICAL COMPONENTS	27F630T		18-CB0102-JNX
R033	266255	RES. C.F. 1K OHM 1/6W +/-5%	ELECTRICAL COMPONENTS	27F520T		18-CB0102-JNX
R033	266255	RES. C.F. 1K OHM 1/6W +/-5%	ELECTRICAL COMPONENTS	27V520T		18-CB0102-JNX
R033	266255	RES. C.F. 1K OHM 1/6W +/-5%	ELECTRICAL COMPONENTS	24V511T		18-CB0102-JNX
R033	266255	RES. C.F. 1K OHM 1/6W +/-5%	ELECTRICAL COMPONENTS	27V512T		18-CB0102-JNX
R0333	268374	RES. C.F. 120K OHM 1/6W +/-5%	ELECTRICAL COMPONENTS	27F630T		18-CB0124-JNX
R0333	268374	RES. C.F. 120K OHM 1/6W +/-5%	ELECTRICAL COMPONENTS	27V513T		18-CB0124-JNX
R0333	268374	RES. C.F. 120K OHM 1/6W +/-5%	ELECTRICAL COMPONENTS	24F512T		18-CB0124-JNX
R0333	268374	RES. C.F. 120K OHM 1/6W +/-5%	ELECTRICAL COMPONENTS	27F520T		18-CB0124-JNX
R0333	268374	RES. C.F. 120K OHM 1/6W +/-5%	ELECTRICAL COMPONENTS	27V512T		18-CB0124-JNX
R0333	268374	RES. C.F. 120K OHM 1/6W +/-5%	ELECTRICAL COMPONENTS	27V520T		18-CB0124-JNX
R033A	268374	RES. C.F. 120K OHM 1/6W +/-5%	ELECTRICAL COMPONENTS	24V511T		18-CB0124-JNX
R033B	266370	RES. C.F. 470 OHM 1/6W +/-5%	ELECTRICAL COMPONENTS	27V513T		18-CB0471-JNX
R033B	266370	RES. C.F. 470 OHM 1/6W +/-5%	ELECTRICAL COMPONENTS	27V512T		18-CB0471-JNX
R033B	266370	RES. C.F. 470 OHM 1/6W +/-5%	ELECTRICAL COMPONENTS	27F520T		18-CB0471-JNX
R033B	266370	RES. C.F. 470 OHM 1/6W +/-5%	ELECTRICAL COMPONENTS	24V511T		18-CB0471-JNX
R033B	266370	RES. C.F. 470 OHM 1/6W +/-5%	ELECTRICAL COMPONENTS	27F630T		18-CB0471-JNX
R033B	266370	RES. C.F. 470 OHM 1/6W +/-5%	ELECTRICAL COMPONENTS	24F512T		18-CB0471-JNX
R033B	266370	RES. C.F. 470 OHM 1/6W +/-5%	ELECTRICAL COMPONENTS	27V520T		18-CB0471-JNX
R033C	266285	RES. C.F. 4.7K OHM 1/6W +/-5%	ELECTRICAL COMPONENTS	27V512T		18-CB0472-JNX

Symbol	Stock	Description	Circuit	Model	TypeCode	Drawing
R033C	266285	RES. C.F. 4.7K OHM 1/6W +/-5%	ELECTRICAL COMPONENTS	27V520T		18-CB0472-JNX
R033C	266285	RES. C.F. 4.7K OHM 1/6W +/-5%	ELECTRICAL COMPONENTS	27V513T		18-CB0472-JNX
R033C	266285	RES. C.F. 4.7K OHM 1/6W +/-5%	ELECTRICAL COMPONENTS	27F630T		18-CB0472-JNX
R033C	266285	RES. C.F. 4.7K OHM 1/6W +/-5%	ELECTRICAL COMPONENTS	27F520T		18-CB0472-JNX
R034	266322	RES. C.F. 10K OHM 1/6W +/-5%	ELECTRICAL COMPONENTS	24V511T		18-CB0103-JNX
R034	266322	RES. C.F. 10K OHM 1/6W +/-5%	ELECTRICAL COMPONENTS	27V520T		18-CB0103-JNX
R034	266322	RES. C.F. 10K OHM 1/6W +/-5%	ELECTRICAL COMPONENTS	27V512T		18-CB0103-JNX
R034	266322	RES. C.F. 10K OHM 1/6W +/-5%	ELECTRICAL COMPONENTS	27F630T		18-CB0103-JNX
R034	266322	RES. C.F. 10K OHM 1/6W +/-5%	ELECTRICAL COMPONENTS	27V513T		18-CB0103-JNX
R034	266322	RES. C.F. 10K OHM 1/6W +/-5%	ELECTRICAL COMPONENTS	27F520T		18-CB0103-JNX
R034	266322	RES. C.F. 10K OHM 1/6W +/-5%	ELECTRICAL COMPONENTS	24F512T		18-CB0103-JNX
R036	266370	RES. C.F. 470 OHM 1/6W +/-5%	ELECTRICAL COMPONENTS	24V511T		18-CB0471-JNX
R036	266370	RES. C.F. 470 OHM 1/6W +/-5%	ELECTRICAL COMPONENTS	27F630T		18-CB0471-JNX
R036	266370	RES. C.F. 470 OHM 1/6W +/-5%	ELECTRICAL COMPONENTS	27V520T		18-CB0471-JNX
R036	266370	RES. C.F. 470 OHM 1/6W +/-5%	ELECTRICAL COMPONENTS	27V513T		18-CB0471-JNX
R036	266370	RES. C.F. 470 OHM 1/6W +/-5%	ELECTRICAL COMPONENTS	24F512T		18-CB0471-JNX
R036	266370	RES. C.F. 470 OHM 1/6W +/-5%	ELECTRICAL COMPONENTS	27V512T		18-CB0471-JNX
R036	266370	RES. C.F. 470 OHM 1/6W +/-5%	ELECTRICAL COMPONENTS	27F520T		18-CB0471-JNX
R036A	266322	RES. C.F. 10K OHM 1/6W +/-5%	ELECTRICAL COMPONENTS	24V511T		18-CB0103-JNX
R036A	266322	RES. C.F. 10K OHM 1/6W +/-5%	ELECTRICAL COMPONENTS	27F520T		18-CB0103-JNX
R036A	266322	RES. C.F. 10K OHM 1/6W +/-5%	ELECTRICAL COMPONENTS	24F512T		18-CB0103-JNX
R036A	266322	RES. C.F. 10K OHM 1/6W +/-5%	ELECTRICAL COMPONENTS	27F630T		18-CB0103-JNX
R036A	266322	RES. C.F. 10K OHM 1/6W +/-5%	ELECTRICAL COMPONENTS	27V513T		18-CB0103-JNX
R036A	266322	RES. C.F. 10K OHM 1/6W +/-5%	ELECTRICAL COMPONENTS	27V520T		18-CB0103-JNX
R036A	266322	RES. C.F. 10K OHM 1/6W +/-5%	ELECTRICAL COMPONENTS	27V512T		18-CB0103-JNX
R043	266322	RES. C.F. 10K OHM 1/6W +/-5%	ELECTRICAL COMPONENTS	27V512T		18-CB0103-JNX
R043	266322	RES. C.F. 10K OHM 1/6W +/-5%	ELECTRICAL COMPONENTS	27V513T		18-CB0103-JNX
R043	266322	RES. C.F. 10K OHM 1/6W +/-5%	ELECTRICAL COMPONENTS	27V520T		18-CB0103-JNX
R043	266322	RES. C.F. 10K OHM 1/6W +/-5%	ELECTRICAL COMPONENTS	27F630T		18-CB0103-JNX
R043	266322	RES. C.F. 10K OHM 1/6W +/-5%	ELECTRICAL COMPONENTS	24V511T		18-CB0103-JNX
R043	266322	RES. C.F. 10K OHM 1/6W +/-5%	ELECTRICAL COMPONENTS	27F520T		18-CB0103-JNX
R043	266322	RES. C.F. 10K OHM 1/6W +/-5%	ELECTRICAL COMPONENTS	24F512T		18-CB0103-JNX
R044	266271	RES. C.F. 2.2K OHM 1/6W +/-5%	ELECTRICAL COMPONENTS	27V512T		18-CB0222-JNX
R044	266271	RES. C.F. 2.2K OHM 1/6W +/-5%	ELECTRICAL COMPONENTS	27F520T		18-CB0222-JNX
R044	266271	RES. C.F. 2.2K OHM 1/6W +/-5%	ELECTRICAL COMPONENTS	24F512T		18-CB0222-JNX
R044	266271	RES. C.F. 2.2K OHM 1/6W +/-5%	ELECTRICAL COMPONENTS	24V511T		18-CB0222-JNX
R044	266271	RES. C.F. 2.2K OHM 1/6W +/-5%	ELECTRICAL COMPONENTS	27V520T		18-CB0222-JNX
R044	266271	RES. C.F. 2.2K OHM 1/6W +/-5%	ELECTRICAL COMPONENTS	27V513T		18-CB0222-JNX
R044	266271	RES. C.F. 2.2K OHM 1/6W +/-5%	ELECTRICAL COMPONENTS	27F630T		18-CB0222-JNX
R070A	266325	RES. C.F. 47 OHM 1/6W +/-5%	ELECTRICAL COMPONENTS	27F520T		18-CB0470-JNX
R070A	266325	RES. C.F. 47 OHM 1/6W +/-5%	ELECTRICAL COMPONENTS	27V512T		18-CB0470-JNX
R070A	266325	RES. C.F. 47 OHM 1/6W +/-5%	ELECTRICAL COMPONENTS	27F630T		18-CB0470-JNX
R070A	266325	RES. C.F. 47 OHM 1/6W +/-5%	ELECTRICAL COMPONENTS	24V511T		18-CB0470-JNX
R070A	266325	RES. C.F. 47 OHM 1/6W +/-5%	ELECTRICAL COMPONENTS	27V520T		18-CB0470-JNX
R070A	266325	RES. C.F. 47 OHM 1/6W +/-5%	ELECTRICAL COMPONENTS	24F512T		18-CB0470-JNX
R070A	266325	RES. C.F. 47 OHM 1/6W +/-5%	ELECTRICAL COMPONENTS	27V513T		18-CB0470-JNX
R1001	266253	RES. C.F. 100 OHM 1/6W +/-5%	ELECTRICAL COMPONENTS	27F520T		18-CB0101-JNX
R1001	266253	RES. C.F. 100 OHM 1/6W +/-5%	ELECTRICAL COMPONENTS	24V511T		18-CB0101-JNX
R1001	266253	RES. C.F. 100 OHM 1/6W +/-5%	ELECTRICAL COMPONENTS	24F512T		18-CB0101-JNX
R1001	266253	RES. C.F. 100 OHM 1/6W +/-5%	ELECTRICAL COMPONENTS	27V513T		18-CB0101-JNX
R1001	266253	RES. C.F. 100 OHM 1/6W +/-5%	ELECTRICAL COMPONENTS	27F630T		18-CB0101-JNX
R1001	266253	RES. C.F. 100 OHM 1/6W +/-5%	ELECTRICAL COMPONENTS	27V512T		18-CB0101-JNX
R1001	266253	RES. C.F. 100 OHM 1/6W +/-5%	ELECTRICAL COMPONENTS	27V520T		18-CB0101-JNX
R1002	266253	RES. C.F. 100 OHM 1/6W +/-5%	ELECTRICAL COMPONENTS	24V511T		18-CB0101-JNX
R1002	266253	RES. C.F. 100 OHM 1/6W +/-5%	ELECTRICAL COMPONENTS	27V520T		18-CB0101-JNX
R1002	266253	RES. C.F. 100 OHM 1/6W +/-5%	ELECTRICAL COMPONENTS	27F630T		18-CB0101-JNX
R1002	266253	RES. C.F. 100 OHM 1/6W +/-5%	ELECTRICAL COMPONENTS	27V513T		18-CB0101-JNX
R1002	266253	RES. C.F. 100 OHM 1/6W +/-5%	ELECTRICAL COMPONENTS	27V512T		18-CB0101-JNX
R1002	266253	RES. C.F. 100 OHM 1/6W +/-5%	ELECTRICAL COMPONENTS	27F520T		18-CB0101-JNX
R1002	266253	RES. C.F. 100 OHM 1/6W +/-5%	ELECTRICAL COMPONENTS	24F512T		18-CB0101-JNX

Symbol	Stock	Description	Circuit	Model	TypeCode	Drawing
R1004	266596	RES. C.F. 100K OHM 1/6W +/-5%	ELECTRICAL COMPONENTS	24F512T		18-CB0104-JNX
R1004	266596	RES. C.F. 100K OHM 1/6W +/-5%	ELECTRICAL COMPONENTS	27V520T		18-CB0104-JNX
R1004	266596	RES. C.F. 100K OHM 1/6W +/-5%	ELECTRICAL COMPONENTS	27F520T		18-CB0104-JNX
R1004	266596	RES. C.F. 100K OHM 1/6W +/-5%	ELECTRICAL COMPONENTS	27V513T		18-CB0104-JNX
R1004	266596	RES. C.F. 100K OHM 1/6W +/-5%	ELECTRICAL COMPONENTS	27V512T		18-CB0104-JNX
R1004	266596	RES. C.F. 100K OHM 1/6W +/-5%	ELECTRICAL COMPONENTS	27F630T		18-CB0104-JNX
R1004	266596	RES. C.F. 100K OHM 1/6W +/-5%	ELECTRICAL COMPONENTS	24V511T		18-CB0104-JNX
R1005	266323	RES. C.F. 3.3K OHM 1/6W +/-5%	ELECTRICAL COMPONENTS	27V520T		18-CB0332-JNX
R1005	266323	RES. C.F. 3.3K OHM 1/6W +/-5%	ELECTRICAL COMPONENTS	27V512T		18-CB0332-JNX
R1005	266323	RES. C.F. 3.3K OHM 1/6W +/-5%	ELECTRICAL COMPONENTS	24F512T		18-CB0332-JNX
R1005	266323	RES. C.F. 3.3K OHM 1/6W +/-5%	ELECTRICAL COMPONENTS	24V511T		18-CB0332-JNX
R1005	266323	RES. C.F. 3.3K OHM 1/6W +/-5%	ELECTRICAL COMPONENTS	27F630T		18-CB0332-JNX
R1005	266323	RES. C.F. 3.3K OHM 1/6W +/-5%	ELECTRICAL COMPONENTS	27V513T		18-CB0332-JNX
R1005	266323	RES. C.F. 3.3K OHM 1/6W +/-5%	ELECTRICAL COMPONENTS	27F520T		18-CB0332-JNX
R1006	266325	RES. C.F. 47 OHM 1/6W +/-5%	ELECTRICAL COMPONENTS	27V513T		18-CB0470-JNX
R1006	266325	RES. C.F. 47 OHM 1/6W +/-5%	ELECTRICAL COMPONENTS	24V511T		18-CB0470-JNX
R1006	266325	RES. C.F. 47 OHM 1/6W +/-5%	ELECTRICAL COMPONENTS	24F512T		18-CB0470-JNX
R1006	266325	RES. C.F. 47 OHM 1/6W +/-5%	ELECTRICAL COMPONENTS	27V512T		18-CB0470-JNX
R1006	266325	RES. C.F. 47 OHM 1/6W +/-5%	ELECTRICAL COMPONENTS	27F630T		18-CB0470-JNX
R1006	266325	RES. C.F. 47 OHM 1/6W +/-5%	ELECTRICAL COMPONENTS	27V520T		18-CB0470-JNX
R1006	266325	RES. C.F. 47 OHM 1/6W +/-5%	ELECTRICAL COMPONENTS	27F520T		18-CB0470-JNX
R1007	266344	RES. C.F. 1.5K OHM 1/6W +/-5%	ELECTRICAL COMPONENTS	24F512T		18-CB0152-JNX
R1007	266344	RES. C.F. 1.5K OHM 1/6W +/-5%	ELECTRICAL COMPONENTS	27F630T		18-CB0152-JNX
R1007	266344	RES. C.F. 1.5K OHM 1/6W +/-5%	ELECTRICAL COMPONENTS	27V512T		18-CB0152-JNX
R1007	266344	RES. C.F. 1.5K OHM 1/6W +/-5%	ELECTRICAL COMPONENTS	27V513T		18-CB0152-JNX
R1007	266344	RES. C.F. 1.5K OHM 1/6W +/-5%	ELECTRICAL COMPONENTS	27V520T		18-CB0152-JNX
R1007	266344	RES. C.F. 1.5K OHM 1/6W +/-5%	ELECTRICAL COMPONENTS	27F520T		18-CB0152-JNX
R1007	266344	RES. C.F. 1.5K OHM 1/6W +/-5%	ELECTRICAL COMPONENTS	24V511T		18-CB0152-JNX
R101	266253	RES. C.F. 100 OHM 1/6W +/-5%	ELECTRICAL COMPONENTS	24F512T		18-CB0101-JNX
R101	266253	RES. C.F. 100 OHM 1/6W +/-5%	ELECTRICAL COMPONENTS	27V520T		18-CB0101-JNX
R101	266253	RES. C.F. 100 OHM 1/6W +/-5%	ELECTRICAL COMPONENTS	27F520T		18-CB0101-JNX
R101	266253	RES. C.F. 100 OHM 1/6W +/-5%	ELECTRICAL COMPONENTS	27V513T		18-CB0101-JNX
R101	266253	RES. C.F. 100 OHM 1/6W +/-5%	ELECTRICAL COMPONENTS	24V511T		18-CB0101-JNX
R101	266253	RES. C.F. 100 OHM 1/6W +/-5%	ELECTRICAL COMPONENTS	27V512T		18-CB0101-JNX
R101	266253	RES. C.F. 100 OHM 1/6W +/-5%	ELECTRICAL COMPONENTS	27F630T		18-CB0101-JNX
R1010	266253	RES. C.F. 100 OHM 1/6W +/-5%	ELECTRICAL COMPONENTS	27V520T		18-CB0101-JNX
R1010	266253	RES. C.F. 100 OHM 1/6W +/-5%	ELECTRICAL COMPONENTS	27F520T		18-CB0101-JNX
R1010	266253	RES. C.F. 100 OHM 1/6W +/-5%	ELECTRICAL COMPONENTS	27F630T		18-CB0101-JNX
R1011	266253	RES. C.F. 100 OHM 1/6W +/-5%	ELECTRICAL COMPONENTS	27V513T		18-CB0101-JNX
R1011	266253	RES. C.F. 100 OHM 1/6W +/-5%	ELECTRICAL COMPONENTS	24F512T		18-CB0101-JNX
R1011	266253	RES. C.F. 100 OHM 1/6W +/-5%	ELECTRICAL COMPONENTS	27V512T		18-CB0101-JNX
R1011	266253	RES. C.F. 100 OHM 1/6W +/-5%	ELECTRICAL COMPONENTS	27V520T		18-CB0101-JNX
R1011	266253	RES. C.F. 100 OHM 1/6W +/-5%	ELECTRICAL COMPONENTS	27F520T		18-CB0101-JNX
R1011	266253	RES. C.F. 100 OHM 1/6W +/-5%	ELECTRICAL COMPONENTS	24V511T		18-CB0101-JNX
R1011	266253	RES. C.F. 100 OHM 1/6W +/-5%	ELECTRICAL COMPONENTS	27F630T		18-CB0101-JNX
R101A	266253	RES. C.F. 100 OHM 1/6W +/-5%	ELECTRICAL COMPONENTS	27V520T		18-CB0101-JNX
R101A	266253	RES. C.F. 100 OHM 1/6W +/-5%	ELECTRICAL COMPONENTS	27F630T		18-CB0101-JNX
R101A	266253	RES. C.F. 100 OHM 1/6W +/-5%	ELECTRICAL COMPONENTS	27F520T		18-CB0101-JNX
R101A	266253	RES. C.F. 100 OHM 1/6W +/-5%	ELECTRICAL COMPONENTS	24F512T		18-CB0101-JNX
R101A	266253	RES. C.F. 100 OHM 1/6W +/-5%	ELECTRICAL COMPONENTS	27V512T		18-CB0101-JNX
R101A	266253	RES. C.F. 100 OHM 1/6W +/-5%	ELECTRICAL COMPONENTS	24V511T		18-CB0101-JNX
R101A	266253	RES. C.F. 100 OHM 1/6W +/-5%	ELECTRICAL COMPONENTS	27V513T		18-CB0101-JNX
R102	266368	RES. C.F. 150 OHM 1/6W +/-5%	ELECTRICAL COMPONENTS	27F630T		18-CB0151-JNX
R102	266368	RES. C.F. 150 OHM 1/6W +/-5%	ELECTRICAL COMPONENTS	24F512T		18-CB0151-JNX
R102	266368	RES. C.F. 150 OHM 1/6W +/-5%	ELECTRICAL COMPONENTS	27F520T		18-CB0151-JNX
R102	266368	RES. C.F. 150 OHM 1/6W +/-5%	ELECTRICAL COMPONENTS	27V513T		18-CB0151-JNX
R102	266368	RES. C.F. 150 OHM 1/6W +/-5%	ELECTRICAL COMPONENTS	24V511T		18-CB0151-JNX
R102	266368	RES. C.F. 150 OHM 1/6W +/-5%	ELECTRICAL COMPONENTS	27V520T		18-CB0151-JNX
R102	266368	RES. C.F. 150 OHM 1/6W +/-5%	ELECTRICAL COMPONENTS	27V512T		18-CB0151-JNX
R1022	266255	RES. C.F. 1K OHM 1/6W +/-5%	ELECTRICAL COMPONENTS	27V520T		18-CB0102-JNX

Symbol	Stock	Description	Circuit	Model	TypeCode	Drawing
R1022	266255	RES. C.F. 1K OHM 1/6W +/-5%	ELECTRICAL COMPONENTS	24V511T		18-CB0102-JNX
R1022	266255	RES. C.F. 1K OHM 1/6W +/-5%	ELECTRICAL COMPONENTS	27F520T		18-CB0102-JNX
R1022	266255	RES. C.F. 1K OHM 1/6W +/-5%	ELECTRICAL COMPONENTS	27V513T		18-CB0102-JNX
R1022	266255	RES. C.F. 1K OHM 1/6W +/-5%	ELECTRICAL COMPONENTS	27V512T		18-CB0102-JNX
R1022	266255	RES. C.F. 1K OHM 1/6W +/-5%	ELECTRICAL COMPONENTS	24F512T		18-CB0102-JNX
R1022	266255	RES. C.F. 1K OHM 1/6W +/-5%	ELECTRICAL COMPONENTS	27F630T		18-CB0102-JNX
R1023	266255	RES. C.F. 1K OHM 1/6W +/-5%	ELECTRICAL COMPONENTS	27V513T		18-CB0102-JNX
R1023	266255	RES. C.F. 1K OHM 1/6W +/-5%	ELECTRICAL COMPONENTS	27V512T		18-CB0102-JNX
R1023	266255	RES. C.F. 1K OHM 1/6W +/-5%	ELECTRICAL COMPONENTS	24F512T		18-CB0102-JNX
R1023	266255	RES. C.F. 1K OHM 1/6W +/-5%	ELECTRICAL COMPONENTS	24V511T		18-CB0102-JNX
R1023	266255	RES. C.F. 1K OHM 1/6W +/-5%	ELECTRICAL COMPONENTS	27F520T		18-CB0102-JNX
R1023	266255	RES. C.F. 1K OHM 1/6W +/-5%	ELECTRICAL COMPONENTS	27F630T		18-CB0102-JNX
R1023	266255	RES. C.F. 1K OHM 1/6W +/-5%	ELECTRICAL COMPONENTS	27V520T		18-CB0102-JNX
R103	266370	RES. C.F. 470 OHM 1/6W +/-5%	ELECTRICAL COMPONENTS	27V520T		18-CB0471-JNX
R103	266370	RES. C.F. 470 OHM 1/6W +/-5%	ELECTRICAL COMPONENTS	24V511T		18-CB0471-JNX
R103	266370	RES. C.F. 470 OHM 1/6W +/-5%	ELECTRICAL COMPONENTS	27F520T		18-CB0471-JNX
R103	266370	RES. C.F. 470 OHM 1/6W +/-5%	ELECTRICAL COMPONENTS	27V513T		18-CB0471-JNX
R103	266370	RES. C.F. 470 OHM 1/6W +/-5%	ELECTRICAL COMPONENTS	27V512T		18-CB0471-JNX
R103	266370	RES. C.F. 470 OHM 1/6W +/-5%	ELECTRICAL COMPONENTS	24F512T		18-CB0471-JNX
R103	266370	RES. C.F. 470 OHM 1/6W +/-5%	ELECTRICAL COMPONENTS	27F630T		18-CB0471-JNX
R104	268375	RES. C.F. 22 OHM 1/6W +/-5%	ELECTRICAL COMPONENTS	24F512T		18-CB0220-JNX
R104	268375	RES. C.F. 22 OHM 1/6W +/-5%	ELECTRICAL COMPONENTS	27V513T		18-CB0220-JNX
R104	268375	RES. C.F. 22 OHM 1/6W +/-5%	ELECTRICAL COMPONENTS	27F520T		18-CB0220-JNX
R104	268375	RES. C.F. 22 OHM 1/6W +/-5%	ELECTRICAL COMPONENTS	27V520T		18-CB0220-JNX
R104	268375	RES. C.F. 22 OHM 1/6W +/-5%	ELECTRICAL COMPONENTS	27V512T		18-CB0220-JNX
R104	268375	RES. C.F. 22 OHM 1/6W +/-5%	ELECTRICAL COMPONENTS	24V511T		18-CB0220-JNX
R104	268375	RES. C.F. 22 OHM 1/6W +/-5%	ELECTRICAL COMPONENTS	27F630T		18-CB0220-JNX
R106	266272	RES. C.F. 680 OHM 1/6W +/-5%	ELECTRICAL COMPONENTS	24V511T		18-CB0681-JNX
R106	266272	RES. C.F. 680 OHM 1/6W +/-5%	ELECTRICAL COMPONENTS	27F630T		18-CB0681-JNX
R106	266272	RES. C.F. 680 OHM 1/6W +/-5%	ELECTRICAL COMPONENTS	27V513T		18-CB0681-JNX
R106	266272	RES. C.F. 680 OHM 1/6W +/-5%	ELECTRICAL COMPONENTS	27V520T		18-CB0681-JNX
R106	266272	RES. C.F. 680 OHM 1/6W +/-5%	ELECTRICAL COMPONENTS	24F512T		18-CB0681-JNX
R106	266272	RES. C.F. 680 OHM 1/6W +/-5%	ELECTRICAL COMPONENTS	27V512T		18-CB0681-JNX
R106	266272	RES. C.F. 680 OHM 1/6W +/-5%	ELECTRICAL COMPONENTS	27F520T		18-CB0681-JNX
R107	266377	RES. C.F. 56 OHM 1/6W +/-5%	ELECTRICAL COMPONENTS	24V511T		18-CB0560-JNX
R107	266377	RES. C.F. 56 OHM 1/6W +/-5%	ELECTRICAL COMPONENTS	27V520T		18-CB0560-JNX
R107	266377	RES. C.F. 56 OHM 1/6W +/-5%	ELECTRICAL COMPONENTS	24F512T		18-CB0560-JNX
R107	266377	RES. C.F. 56 OHM 1/6W +/-5%	ELECTRICAL COMPONENTS	27V512T		18-CB0560-JNX
R107	266377	RES. C.F. 56 OHM 1/6W +/-5%	ELECTRICAL COMPONENTS	27V513T		18-CB0560-JNX
R107	266377	RES. C.F. 56 OHM 1/6W +/-5%	ELECTRICAL COMPONENTS	27F520T		18-CB0560-JNX
R107	266377	RES. C.F. 56 OHM 1/6W +/-5%	ELECTRICAL COMPONENTS	27F630T		18-CB0560-JNX
R108	266368	RES. C.F. 150 OHM 1/6W +/-5%	ELECTRICAL COMPONENTS	27V520T		18-CB0151-JNX
R108	266368	RES. C.F. 150 OHM 1/6W +/-5%	ELECTRICAL COMPONENTS	27V513T		18-CB0151-JNX
R108	266368	RES. C.F. 150 OHM 1/6W +/-5%	ELECTRICAL COMPONENTS	24V511T		18-CB0151-JNX
R108	266368	RES. C.F. 150 OHM 1/6W +/-5%	ELECTRICAL COMPONENTS	27F520T		18-CB0151-JNX
R108	266368	RES. C.F. 150 OHM 1/6W +/-5%	ELECTRICAL COMPONENTS	27V512T		18-CB0151-JNX
R108	266368	RES. C.F. 150 OHM 1/6W +/-5%	ELECTRICAL COMPONENTS	27F630T		18-CB0151-JNX
R108	266368	RES. C.F. 150 OHM 1/6W +/-5%	ELECTRICAL COMPONENTS	24F512T		18-CB0151-JNX
R1201	266369	RES. C.F. 820 OHM 1/6W +/-5%	ELECTRICAL COMPONENTS	27F630T		18-CB0821-JNX
R1201	266369	RES. C.F. 820 OHM 1/6W +/-5%	ELECTRICAL COMPONENTS	27F520T		18-CB0821-JNX
R1201	266369	RES. C.F. 820 OHM 1/6W +/-5%	ELECTRICAL COMPONENTS	27V520T		18-CB0821-JNX
R1202	266917	RES. C.F. 1.2K OHM 1/6W +/-5%	ELECTRICAL COMPONENTS	27F520T		18-CB0122-JNX
R1202	266917	RES. C.F. 1.2K OHM 1/6W +/-5%	ELECTRICAL COMPONENTS	27V520T		18-CB0122-JNX
R1202	266917	RES. C.F. 1.2K OHM 1/6W +/-5%	ELECTRICAL COMPONENTS	27F630T		18-CB0122-JNX
R1203	266372	RES. C.F. 6.8K OHM 1/6W +/-5%	ELECTRICAL COMPONENTS	27F630T		18-CB0682-JNX
R1203	266372	RES. C.F. 6.8K OHM 1/6W +/-5%	ELECTRICAL COMPONENTS	27F520T		18-CB0682-JNX
R1203	266372	RES. C.F. 6.8K OHM 1/6W +/-5%	ELECTRICAL COMPONENTS	27V520T		18-CB0682-JNX
R1204	268376	RES. C.F. 12K OHM 1/6W +/-5%	ELECTRICAL COMPONENTS	27F630T		18-CB0123-JNX
R1204	268376	RES. C.F. 12K OHM 1/6W +/-5%	ELECTRICAL COMPONENTS	27V520T		18-CB0123-JNX
R1204	268376	RES. C.F. 12K OHM 1/6W +/-5%	ELECTRICAL COMPONENTS	27F520T		18-CB0123-JNX

Symbol	Stock	Description	Circuit	Model	TypeCode	Drawing
R1205	268377	RES. C.F. 560 OHM 1/6W +/-5%	ELECTRICAL COMPONENTS	27F630T		18-CB0561-JNX
R1205	268377	RES. C.F. 560 OHM 1/6W +/-5%	ELECTRICAL COMPONENTS	27F520T		18-CB0561-JNX
R1205	268377	RES. C.F. 560 OHM 1/6W +/-5%	ELECTRICAL COMPONENTS	27V520T		18-CB0561-JNX
R1206	268377	RES. C.F. 560 OHM 1/6W +/-5%	ELECTRICAL COMPONENTS	27V520T		18-CB0561-JNX
R1206	268377	RES. C.F. 560 OHM 1/6W +/-5%	ELECTRICAL COMPONENTS	27F520T		18-CB0561-JNX
R1206	268377	RES. C.F. 560 OHM 1/6W +/-5%	ELECTRICAL COMPONENTS	27F630T		18-CB0561-JNX
R1207	268377	RES. C.F. 560 OHM 1/6W +/-5%	ELECTRICAL COMPONENTS	27F520T		18-CB0561-JNX
R1207	268377	RES. C.F. 560 OHM 1/6W +/-5%	ELECTRICAL COMPONENTS	27V520T		18-CB0561-JNX
R1207	268377	RES. C.F. 560 OHM 1/6W +/-5%	ELECTRICAL COMPONENTS	27F630T		18-CB0561-JNX
R1208	266917	RES. C.F. 1.2K OHM 1/6W +/-5%	ELECTRICAL COMPONENTS	27V520T		18-CB0122-JNX
R1208	266917	RES. C.F. 1.2K OHM 1/6W +/-5%	ELECTRICAL COMPONENTS	27F630T		18-CB0122-JNX
R1208	266917	RES. C.F. 1.2K OHM 1/6W +/-5%	ELECTRICAL COMPONENTS	27F520T		18-CB0122-JNX
R1209	266369	RES. C.F. 820 OHM 1/6W +/-5%	ELECTRICAL COMPONENTS	27F520T		18-CB0821-JNX
R1209	266369	RES. C.F. 820 OHM 1/6W +/-5%	ELECTRICAL COMPONENTS	27F630T		18-CB0821-JNX
R1209	266369	RES. C.F. 820 OHM 1/6W +/-5%	ELECTRICAL COMPONENTS	27V520T		18-CB0821-JNX
R1211	266253	RES. C.F. 100 OHM 1/6W +/-5%	ELECTRICAL COMPONENTS	27F520T		18-CB0101-JNX
R1211	266253	RES. C.F. 100 OHM 1/6W +/-5%	ELECTRICAL COMPONENTS	27V520T		18-CB0101-JNX
R1211	266253	RES. C.F. 100 OHM 1/6W +/-5%	ELECTRICAL COMPONENTS	27F630T		18-CB0101-JNX
R1212	266253	RES. C.F. 100 OHM 1/6W +/-5%	ELECTRICAL COMPONENTS	27F520T		18-CB0101-JNX
R1212	266253	RES. C.F. 100 OHM 1/6W +/-5%	ELECTRICAL COMPONENTS	27V520T		18-CB0101-JNX
R1212	266253	RES. C.F. 100 OHM 1/6W +/-5%	ELECTRICAL COMPONENTS	27F630T		18-CB0101-JNX
R1213	266369	RES. C.F. 820 OHM 1/6W +/-5%	ELECTRICAL COMPONENTS	27F630T		18-CB0821-JNX
R1213	266369	RES. C.F. 820 OHM 1/6W +/-5%	ELECTRICAL COMPONENTS	27F520T		18-CB0821-JNX
R1213	266369	RES. C.F. 820 OHM 1/6W +/-5%	ELECTRICAL COMPONENTS	27V520T		18-CB0821-JNX
R1215	266322	RES. C.F. 10K OHM 1/6W +/-5%	ELECTRICAL COMPONENTS	27F630T		18-CB0103-JNX
R1215	266322	RES. C.F. 10K OHM 1/6W +/-5%	ELECTRICAL COMPONENTS	27V520T		18-CB0103-JNX
R1215	266322	RES. C.F. 10K OHM 1/6W +/-5%	ELECTRICAL COMPONENTS	27F520T		18-CB0103-JNX
R1216	266322	RES. C.F. 10K OHM 1/6W +/-5%	ELECTRICAL COMPONENTS	27V520T		18-CB0103-JNX
R1216	266322	RES. C.F. 10K OHM 1/6W +/-5%	ELECTRICAL COMPONENTS	27F520T		18-CB0103-JNX
R1216	266322	RES. C.F. 10K OHM 1/6W +/-5%	ELECTRICAL COMPONENTS	27F630T		18-CB0103-JNX
R1217	266383	RES. C.F. 22K OHM 1/6W +/-5%	ELECTRICAL COMPONENTS	27F520T		18-CB0223-JNX
R1217	266383	RES. C.F. 22K OHM 1/6W +/-5%	ELECTRICAL COMPONENTS	27F630T		18-CB0223-JNX
R1217	266383	RES. C.F. 22K OHM 1/6W +/-5%	ELECTRICAL COMPONENTS	27V520T		18-CB0223-JNX
R1218	266322	RES. C.F. 10K OHM 1/6W +/-5%	ELECTRICAL COMPONENTS	27F520T		18-CB0103-JNX
R1218	266322	RES. C.F. 10K OHM 1/6W +/-5%	ELECTRICAL COMPONENTS	27F630T		18-CB0103-JNX
R1218	266322	RES. C.F. 10K OHM 1/6W +/-5%	ELECTRICAL COMPONENTS	27V520T		18-CB0103-JNX
R1219	266383	RES. C.F. 22K OHM 1/6W +/-5%	ELECTRICAL COMPONENTS	27F630T		18-CB0223-JNX
R1219	266383	RES. C.F. 22K OHM 1/6W +/-5%	ELECTRICAL COMPONENTS	27V520T		18-CB0223-JNX
R1219	266383	RES. C.F. 22K OHM 1/6W +/-5%	ELECTRICAL COMPONENTS	27F520T		18-CB0223-JNX
R1220	266253	RES. C.F. 100 OHM 1/6W +/-5%	ELECTRICAL COMPONENTS	27V520T		18-CB0101-JNX
R1220	266253	RES. C.F. 100 OHM 1/6W +/-5%	ELECTRICAL COMPONENTS	27F630T		18-CB0101-JNX
R1220	266253	RES. C.F. 100 OHM 1/6W +/-5%	ELECTRICAL COMPONENTS	27F520T		18-CB0101-JNX
R1221	266255	RES. C.F. 1K OHM 1/6W +/-5%	ELECTRICAL COMPONENTS	27F520T		18-CB0102-JNX
R1221	266255	RES. C.F. 1K OHM 1/6W +/-5%	ELECTRICAL COMPONENTS	27V520T		18-CB0102-JNX
R1221	266255	RES. C.F. 1K OHM 1/6W +/-5%	ELECTRICAL COMPONENTS	27F630T		18-CB0102-JNX
R1228	266253	RES. C.F. 100 OHM 1/6W +/-5%	ELECTRICAL COMPONENTS	27F630T		18-CB0101-JNX
R1228	266253	RES. C.F. 100 OHM 1/6W +/-5%	ELECTRICAL COMPONENTS	27F520T		18-CB0101-JNX
R1228	266253	RES. C.F. 100 OHM 1/6W +/-5%	ELECTRICAL COMPONENTS	27V520T		18-CB0101-JNX
R1229	266255	RES. C.F. 1K OHM 1/6W +/-5%	ELECTRICAL COMPONENTS	27F630T		18-CB0102-JNX
R1229	266255	RES. C.F. 1K OHM 1/6W +/-5%	ELECTRICAL COMPONENTS	27V520T		18-CB0102-JNX
R1229	266255	RES. C.F. 1K OHM 1/6W +/-5%	ELECTRICAL COMPONENTS	27F520T		18-CB0102-JNX
R1232	266285	RES. C.F. 4.7K OHM 1/6W +/-5%	ELECTRICAL COMPONENTS	27F520T		18-CB0472-JNX
R1232	266285	RES. C.F. 4.7K OHM 1/6W +/-5%	ELECTRICAL COMPONENTS	27V520T		18-CB0472-JNX
R1232	266285	RES. C.F. 4.7K OHM 1/6W +/-5%	ELECTRICAL COMPONENTS	27F630T		18-CB0472-JNX
R1233	266383	RES. C.F. 22K OHM 1/6W +/-5%	ELECTRICAL COMPONENTS	27F630T		18-CB0223-JNX
R1233	266383	RES. C.F. 22K OHM 1/6W +/-5%	ELECTRICAL COMPONENTS	27F520T		18-CB0223-JNX
R1233	266383	RES. C.F. 22K OHM 1/6W +/-5%	ELECTRICAL COMPONENTS	27V520T		18-CB0223-JNX
R1234	266383	RES. C.F. 22K OHM 1/6W +/-5%	ELECTRICAL COMPONENTS	27V520T		18-CB0223-JNX
R1234	266383	RES. C.F. 22K OHM 1/6W +/-5%	ELECTRICAL COMPONENTS	27F630T		18-CB0223-JNX
R1234	266383	RES. C.F. 22K OHM 1/6W +/-5%	ELECTRICAL COMPONENTS	27F520T		18-CB0223-JNX

Symbol	Stock	Description	Circuit	Model	TypeCode	Drawing
R1236	266322	RES. C.F. 10K OHM 1/6W +/-5%	ELECTRICAL COMPONENTS	27F630T		18-CB0103-JNX
R1236	266322	RES. C.F. 10K OHM 1/6W +/-5%	ELECTRICAL COMPONENTS	27V520T		18-CB0103-JNX
R1236	266322	RES. C.F. 10K OHM 1/6W +/-5%	ELECTRICAL COMPONENTS	27F520T		18-CB0103-JNX
R1237	266253	RES. C.F. 100 OHM 1/6W +/-5%	ELECTRICAL COMPONENTS	27V520T		18-CB0101-JNX
R1237	266253	RES. C.F. 100 OHM 1/6W +/-5%	ELECTRICAL COMPONENTS	27F630T		18-CB0101-JNX
R1237	266253	RES. C.F. 100 OHM 1/6W +/-5%	ELECTRICAL COMPONENTS	27F520T		18-CB0101-JNX
R209	266322	RES. C.F. 10K OHM 1/6W +/-5%	ELECTRICAL COMPONENTS	27F520T		18-CB0103-JNX
R209	266322	RES. C.F. 10K OHM 1/6W +/-5%	ELECTRICAL COMPONENTS	27V512T		18-CB0103-JNX
R209	266322	RES. C.F. 10K OHM 1/6W +/-5%	ELECTRICAL COMPONENTS	24F512T		18-CB0103-JNX
R209	266322	RES. C.F. 10K OHM 1/6W +/-5%	ELECTRICAL COMPONENTS	24V511T		18-CB0103-JNX
R209	266322	RES. C.F. 10K OHM 1/6W +/-5%	ELECTRICAL COMPONENTS	27V513T		18-CB0103-JNX
R209	266322	RES. C.F. 10K OHM 1/6W +/-5%	ELECTRICAL COMPONENTS	27V520T		18-CB0103-JNX
R209	266322	RES. C.F. 10K OHM 1/6W +/-5%	ELECTRICAL COMPONENTS	27F630T		18-CB0103-JNX
R211	266285	RES. C.F. 4.7K OHM 1/6W +/-5%	ELECTRICAL COMPONENTS	27V512T		18-CB0472-JNX
R211	266285	RES. C.F. 4.7K OHM 1/6W +/-5%	ELECTRICAL COMPONENTS	27V513T		18-CB0472-JNX
R211	266285	RES. C.F. 4.7K OHM 1/6W +/-5%	ELECTRICAL COMPONENTS	27F520T		18-CB0472-JNX
R211	266285	RES. C.F. 4.7K OHM 1/6W +/-5%	ELECTRICAL COMPONENTS	27V520T		18-CB0472-JNX
R211	266285	RES. C.F. 4.7K OHM 1/6W +/-5%	ELECTRICAL COMPONENTS	24F512T		18-CB0472-JNX
R211	266285	RES. C.F. 4.7K OHM 1/6W +/-5%	ELECTRICAL COMPONENTS	27F630T		18-CB0472-JNX
R211	266285	RES. C.F. 4.7K OHM 1/6W +/-5%	ELECTRICAL COMPONENTS	24V511T		18-CB0472-JNX
R212	266885	DIODE 1N4148 (SWITCHING)	ELECTRICAL COMPONENTS	24V511T		10-1N4148-ABX
R212	266885	DIODE 1N4148 (SWITCHING)	ELECTRICAL COMPONENTS	27F520T		10-1N4148-ABX
R212	266885	DIODE 1N4148 (SWITCHING)	ELECTRICAL COMPONENTS	24F512T		10-1N4148-ABX
R212	266885	DIODE 1N4148 (SWITCHING)	ELECTRICAL COMPONENTS	27V520T		10-1N4148-ABX
R212	266885	DIODE 1N4148 (SWITCHING)	ELECTRICAL COMPONENTS	27V512T		10-1N4148-ABX
R212	266885	DIODE 1N4148 (SWITCHING)	ELECTRICAL COMPONENTS	27V513T		10-1N4148-ABX
R212	266885	DIODE 1N4148 (SWITCHING)	ELECTRICAL COMPONENTS	27F630T		10-1N4148-ABX
R213	266322	RES. C.F. 10K OHM 1/6W +/-5%	ELECTRICAL COMPONENTS	27V520T		18-CB0103-JNX
R213	266322	RES. C.F. 10K OHM 1/6W +/-5%	ELECTRICAL COMPONENTS	27V512T		18-CB0103-JNX
R213	266322	RES. C.F. 10K OHM 1/6W +/-5%	ELECTRICAL COMPONENTS	27F520T		18-CB0103-JNX
R213	266322	RES. C.F. 10K OHM 1/6W +/-5%	ELECTRICAL COMPONENTS	24V511T		18-CB0103-JNX
R213	266322	RES. C.F. 10K OHM 1/6W +/-5%	ELECTRICAL COMPONENTS	27F630T		18-CB0103-JNX
R213	266322	RES. C.F. 10K OHM 1/6W +/-5%	ELECTRICAL COMPONENTS	24F512T		18-CB0103-JNX
R213	266322	RES. C.F. 10K OHM 1/6W +/-5%	ELECTRICAL COMPONENTS	27V513T		18-CB0103-JNX
R214	266600	RES. C.F. 270 OHM 1/6W +/-5%	ELECTRICAL COMPONENTS	27F630T		18-CB0271-JNX
R214	266600	RES. C.F. 270 OHM 1/6W +/-5%	ELECTRICAL COMPONENTS	24V511T		18-CB0271-JNX
R214	266600	RES. C.F. 270 OHM 1/6W +/-5%	ELECTRICAL COMPONENTS	27V512T		18-CB0271-JNX
R214	266600	RES. C.F. 270 OHM 1/6W +/-5%	ELECTRICAL COMPONENTS	24F512T		18-CB0271-JNX
R214	266600	RES. C.F. 270 OHM 1/6W +/-5%	ELECTRICAL COMPONENTS	27V520T		18-CB0271-JNX
R214	266600	RES. C.F. 270 OHM 1/6W +/-5%	ELECTRICAL COMPONENTS	27V513T		18-CB0271-JNX
R214	266600	RES. C.F. 270 OHM 1/6W +/-5%	ELECTRICAL COMPONENTS	27F520T		18-CB0271-JNX
R215	266600	RES. C.F. 270 OHM 1/6W +/-5%	ELECTRICAL COMPONENTS	27F520T		18-CB0271-JNX
R215	266600	RES. C.F. 270 OHM 1/6W +/-5%	ELECTRICAL COMPONENTS	27V512T		18-CB0271-JNX
R215	266600	RES. C.F. 270 OHM 1/6W +/-5%	ELECTRICAL COMPONENTS	27F630T		18-CB0271-JNX
R215	266600	RES. C.F. 270 OHM 1/6W +/-5%	ELECTRICAL COMPONENTS	24V511T		18-CB0271-JNX
R215	266600	RES. C.F. 270 OHM 1/6W +/-5%	ELECTRICAL COMPONENTS	27V513T		18-CB0271-JNX
R215	266600	RES. C.F. 270 OHM 1/6W +/-5%	ELECTRICAL COMPONENTS	24F512T		18-CB0271-JNX
R215	266600	RES. C.F. 270 OHM 1/6W +/-5%	ELECTRICAL COMPONENTS	27V520T		18-CB0271-JNX
R216	266600	RES. C.F. 270 OHM 1/6W +/-5%	ELECTRICAL COMPONENTS	27V513T		18-CB0271-JNX
R216	266600	RES. C.F. 270 OHM 1/6W +/-5%	ELECTRICAL COMPONENTS	27F520T		18-CB0271-JNX
R216	266600	RES. C.F. 270 OHM 1/6W +/-5%	ELECTRICAL COMPONENTS	24F512T		18-CB0271-JNX
R216	266600	RES. C.F. 270 OHM 1/6W +/-5%	ELECTRICAL COMPONENTS	27F630T		18-CB0271-JNX
R216	266600	RES. C.F. 270 OHM 1/6W +/-5%	ELECTRICAL COMPONENTS	27V512T		18-CB0271-JNX
R216	266600	RES. C.F. 270 OHM 1/6W +/-5%	ELECTRICAL COMPONENTS	27V520T		18-CB0271-JNX
R216	266600	RES. C.F. 270 OHM 1/6W +/-5%	ELECTRICAL COMPONENTS	24V511T		18-CB0271-JNX
R219	266919	RES. C.F. 30K OHM 1/6W +/-5%	ELECTRICAL COMPONENTS	27F630T		18-CB0303-JNX
R219	266919	RES. C.F. 30K OHM 1/6W +/-5%	ELECTRICAL COMPONENTS	27V520T		18-CB0303-JNX
R219	266919	RES. C.F. 30K OHM 1/6W +/-5%	ELECTRICAL COMPONENTS	24F512T		18-CB0303-JNX
R219	266919	RES. C.F. 30K OHM 1/6W +/-5%	ELECTRICAL COMPONENTS	27V513T		18-CB0303-JNX
R219	266919	RES. C.F. 30K OHM 1/6W +/-5%	ELECTRICAL COMPONENTS	24V511T		18-CB0303-JNX

Symbol	Stock	Description	Circuit	Model	TypeCode	Drawing
R219	266919	RES. C.F. 30K OHM 1/6W +/-5%	ELECTRICAL COMPONENTS	27V512T		18-CB0303-JNX
R219	266919	RES. C.F. 30K OHM 1/6W +/-5%	ELECTRICAL COMPONENTS	27F520T		18-CB0303-JNX
R220	266362	RES. C.F. 220K OHM 1/6W +/-5%	ELECTRICAL COMPONENTS	24V511T		18-CB0224-JNX
R220	266362	RES. C.F. 220K OHM 1/6W +/-5%	ELECTRICAL COMPONENTS	27V513T		18-CB0224-JNX
R220	266362	RES. C.F. 220K OHM 1/6W +/-5%	ELECTRICAL COMPONENTS	27V512T		18-CB0224-JNX
R220	266362	RES. C.F. 220K OHM 1/6W +/-5%	ELECTRICAL COMPONENTS	27F630T		18-CB0224-JNX
R220	266362	RES. C.F. 220K OHM 1/6W +/-5%	ELECTRICAL COMPONENTS	27F520T		18-CB0224-JNX
R220	266362	RES. C.F. 220K OHM 1/6W +/-5%	ELECTRICAL COMPONENTS	24F512T		18-CB0224-JNX
R220	266362	RES. C.F. 220K OHM 1/6W +/-5%	ELECTRICAL COMPONENTS	27V520T		18-CB0224-JNX
R222	266596	RES. C.F. 100K OHM 1/6W +/-5%	ELECTRICAL COMPONENTS	27F630T		18-CB0104-JNX
R222	266596	RES. C.F. 100K OHM 1/6W +/-5%	ELECTRICAL COMPONENTS	27F520T		18-CB0104-JNX
R222	266596	RES. C.F. 100K OHM 1/6W +/-5%	ELECTRICAL COMPONENTS	27V513T		18-CB0104-JNX
R222	266596	RES. C.F. 100K OHM 1/6W +/-5%	ELECTRICAL COMPONENTS	24F512T		18-CB0104-JNX
R222	266596	RES. C.F. 100K OHM 1/6W +/-5%	ELECTRICAL COMPONENTS	27V512T		18-CB0104-JNX
R222	266596	RES. C.F. 100K OHM 1/6W +/-5%	ELECTRICAL COMPONENTS	24V511T		18-CB0104-JNX
R222	266596	RES. C.F. 100K OHM 1/6W +/-5%	ELECTRICAL COMPONENTS	27V520T		18-CB0104-JNX
R223	266596	RES. C.F. 100K OHM 1/6W +/-5%	ELECTRICAL COMPONENTS	27V513T		18-CB0104-JNX
R223	266596	RES. C.F. 100K OHM 1/6W +/-5%	ELECTRICAL COMPONENTS	27V520T		18-CB0104-JNX
R223	266596	RES. C.F. 100K OHM 1/6W +/-5%	ELECTRICAL COMPONENTS	24V511T		18-CB0104-JNX
R223	266596	RES. C.F. 100K OHM 1/6W +/-5%	ELECTRICAL COMPONENTS	27V512T		18-CB0104-JNX
R223	266596	RES. C.F. 100K OHM 1/6W +/-5%	ELECTRICAL COMPONENTS	27F520T		18-CB0104-JNX
R223	266596	RES. C.F. 100K OHM 1/6W +/-5%	ELECTRICAL COMPONENTS	27F630T		18-CB0104-JNX
R223	266596	RES. C.F. 100K OHM 1/6W +/-5%	ELECTRICAL COMPONENTS	24F512T		18-CB0104-JNX
R225	266593	RES. C.F. 330 OHM 1/6W +/-5%	ELECTRICAL COMPONENTS	27V520T		18-CB0331-JNX
R225	266593	RES. C.F. 330 OHM 1/6W +/-5%	ELECTRICAL COMPONENTS	24V511T		18-CB0331-JNX
R225	266593	RES. C.F. 330 OHM 1/6W +/-5%	ELECTRICAL COMPONENTS	27V512T		18-CB0331-JNX
R225	266593	RES. C.F. 330 OHM 1/6W +/-5%	ELECTRICAL COMPONENTS	27F630T		18-CB0331-JNX
R225	266593	RES. C.F. 330 OHM 1/6W +/-5%	ELECTRICAL COMPONENTS	27V513T		18-CB0331-JNX
R225	266593	RES. C.F. 330 OHM 1/6W +/-5%	ELECTRICAL COMPONENTS	27F520T		18-CB0331-JNX
R225	266593	RES. C.F. 330 OHM 1/6W +/-5%	ELECTRICAL COMPONENTS	24F512T		18-CB0331-JNX
R226	266253	RES. C.F. 100 OHM 1/6W +/-5%	ELECTRICAL COMPONENTS	27F630T		18-CB0101-JNX
R226	266253	RES. C.F. 100 OHM 1/6W +/-5%	ELECTRICAL COMPONENTS	24V511T		18-CB0101-JNX
R226	266253	RES. C.F. 100 OHM 1/6W +/-5%	ELECTRICAL COMPONENTS	27V512T		18-CB0101-JNX
R226	266253	RES. C.F. 100 OHM 1/6W +/-5%	ELECTRICAL COMPONENTS	27V513T		18-CB0101-JNX
R226	266253	RES. C.F. 100 OHM 1/6W +/-5%	ELECTRICAL COMPONENTS	24F512T		18-CB0101-JNX
R226	266253	RES. C.F. 100 OHM 1/6W +/-5%	ELECTRICAL COMPONENTS	27V520T		18-CB0101-JNX
R226	266253	RES. C.F. 100 OHM 1/6W +/-5%	ELECTRICAL COMPONENTS	27F520T		18-CB0101-JNX
R227	266600	RES. C.F. 270 OHM 1/6W +/-5%	ELECTRICAL COMPONENTS	27V520T		18-CB0271-JNX
R227	266600	RES. C.F. 270 OHM 1/6W +/-5%	ELECTRICAL COMPONENTS	27V512T		18-CB0271-JNX
R227	266600	RES. C.F. 270 OHM 1/6W +/-5%	ELECTRICAL COMPONENTS	27F520T		18-CB0271-JNX
R227	266600	RES. C.F. 270 OHM 1/6W +/-5%	ELECTRICAL COMPONENTS	27F630T		18-CB0271-JNX
R227	266600	RES. C.F. 270 OHM 1/6W +/-5%	ELECTRICAL COMPONENTS	24F512T		18-CB0271-JNX
R227	266600	RES. C.F. 270 OHM 1/6W +/-5%	ELECTRICAL COMPONENTS	24V511T		18-CB0271-JNX
R227	266600	RES. C.F. 270 OHM 1/6W +/-5%	ELECTRICAL COMPONENTS	27V513T		18-CB0271-JNX
R228	266322	RES. C.F. 10K OHM 1/6W +/-5%	ELECTRICAL COMPONENTS	24F512T		18-CB0103-JNX
R228	266322	RES. C.F. 10K OHM 1/6W +/-5%	ELECTRICAL COMPONENTS	27F630T		18-CB0103-JNX
R228	266322	RES. C.F. 10K OHM 1/6W +/-5%	ELECTRICAL COMPONENTS	24V511T		18-CB0103-JNX
R228	266322	RES. C.F. 10K OHM 1/6W +/-5%	ELECTRICAL COMPONENTS	27V512T		18-CB0103-JNX
R228	266322	RES. C.F. 10K OHM 1/6W +/-5%	ELECTRICAL COMPONENTS	27F520T		18-CB0103-JNX
R228	266322	RES. C.F. 10K OHM 1/6W +/-5%	ELECTRICAL COMPONENTS	27V513T		18-CB0103-JNX
R228	266322	RES. C.F. 10K OHM 1/6W +/-5%	ELECTRICAL COMPONENTS	27V520T		18-CB0103-JNX
R229	266364	RES. C.F. 47K OHM 1/6W +/-5%	ELECTRICAL COMPONENTS	27V513T		18-CB0473-JNX
R229	266364	RES. C.F. 47K OHM 1/6W +/-5%	ELECTRICAL COMPONENTS	27V512T		18-CB0473-JNX
R229	266364	RES. C.F. 47K OHM 1/6W +/-5%	ELECTRICAL COMPONENTS	27V520T		18-CB0473-JNX
R229	266364	RES. C.F. 47K OHM 1/6W +/-5%	ELECTRICAL COMPONENTS	24V511T		18-CB0473-JNX
R229	266364	RES. C.F. 47K OHM 1/6W +/-5%	ELECTRICAL COMPONENTS	24F512T		18-CB0473-JNX
R229	266364	RES. C.F. 47K OHM 1/6W +/-5%	ELECTRICAL COMPONENTS	27F630T		18-CB0473-JNX
R229	266364	RES. C.F. 47K OHM 1/6W +/-5%	ELECTRICAL COMPONENTS	27F520T		18-CB0473-JNX
R230	268378	RES. C.F. 24K OHM 1/6W +/-5%	ELECTRICAL COMPONENTS	27F630T		18-CB0243-JNX
R230	268378	RES. C.F. 24K OHM 1/6W +/-5%	ELECTRICAL COMPONENTS	24V511T		18-CB0243-JNX

Symbol	Stock	Description	Circuit	Model	TypeCode	Drawing
R230	268378	RES. C.F. 24K OHM 1/6W +/-5%	ELECTRICAL COMPONENTS	27V520T		18-CB0243-JNX
R230	268378	RES. C.F. 24K OHM 1/6W +/-5%	ELECTRICAL COMPONENTS	27V512T		18-CB0243-JNX
R230	268378	RES. C.F. 24K OHM 1/6W +/-5%	ELECTRICAL COMPONENTS	27V513T		18-CB0243-JNX
R230	268378	RES. C.F. 24K OHM 1/6W +/-5%	ELECTRICAL COMPONENTS	24F512T		18-CB0243-JNX
R230	268378	RES. C.F. 24K OHM 1/6W +/-5%	ELECTRICAL COMPONENTS	27F520T		18-CB0243-JNX
R231	266378	RES. C.F. 33K OHM 1/6W +/-5%	ELECTRICAL COMPONENTS	27V512T		18-CB0333-JNX
R231	266378	RES. C.F. 33K OHM 1/6W +/-5%	ELECTRICAL COMPONENTS	27V513T		18-CB0333-JNX
R231	266378	RES. C.F. 33K OHM 1/6W +/-5%	ELECTRICAL COMPONENTS	24V511T		18-CB0333-JNX
R231	266378	RES. C.F. 33K OHM 1/6W +/-5%	ELECTRICAL COMPONENTS	27V520T		18-CB0333-JNX
R231	266378	RES. C.F. 33K OHM 1/6W +/-5%	ELECTRICAL COMPONENTS	27F520T		18-CB0333-JNX
R231	266378	RES. C.F. 33K OHM 1/6W +/-5%	ELECTRICAL COMPONENTS	24F512T		18-CB0333-JNX
R231	266378	RES. C.F. 33K OHM 1/6W +/-5%	ELECTRICAL COMPONENTS	27F630T		18-CB0333-JNX
R232	266253	RES. C.F. 100 OHM 1/6W +/-5%	ELECTRICAL COMPONENTS	27V513T		18-CB0101-JNX
R232	266253	RES. C.F. 100 OHM 1/6W +/-5%	ELECTRICAL COMPONENTS	24F512T		18-CB0101-JNX
R232	266253	RES. C.F. 100 OHM 1/6W +/-5%	ELECTRICAL COMPONENTS	24V511T		18-CB0101-JNX
R232	266253	RES. C.F. 100 OHM 1/6W +/-5%	ELECTRICAL COMPONENTS	27F630T		18-CB0101-JNX
R232	266253	RES. C.F. 100 OHM 1/6W +/-5%	ELECTRICAL COMPONENTS	27F520T		18-CB0101-JNX
R232	266253	RES. C.F. 100 OHM 1/6W +/-5%	ELECTRICAL COMPONENTS	27V512T		18-CB0101-JNX
R232	266253	RES. C.F. 100 OHM 1/6W +/-5%	ELECTRICAL COMPONENTS	27V520T		18-CB0101-JNX
R233	266593	RES. C.F. 330 OHM 1/6W +/-5%	ELECTRICAL COMPONENTS	27V520T		18-CB0331-JNX
R233	266593	RES. C.F. 330 OHM 1/6W +/-5%	ELECTRICAL COMPONENTS	27F520T		18-CB0331-JNX
R233	266593	RES. C.F. 330 OHM 1/6W +/-5%	ELECTRICAL COMPONENTS	24F512T		18-CB0331-JNX
R233	266593	RES. C.F. 330 OHM 1/6W +/-5%	ELECTRICAL COMPONENTS	27V513T		18-CB0331-JNX
R233	266593	RES. C.F. 330 OHM 1/6W +/-5%	ELECTRICAL COMPONENTS	24V511T		18-CB0331-JNX
R233	266593	RES. C.F. 330 OHM 1/6W +/-5%	ELECTRICAL COMPONENTS	27V512T		18-CB0331-JNX
R233	266593	RES. C.F. 330 OHM 1/6W +/-5%	ELECTRICAL COMPONENTS	27F630T		18-CB0331-JNX
R233A	266323	RES. C.F. 3.3K OHM 1/6W +/-5%	ELECTRICAL COMPONENTS	27V520T		18-CB0332-JNX
R233A	266323	RES. C.F. 3.3K OHM 1/6W +/-5%	ELECTRICAL COMPONENTS	24F512T		18-CB0332-JNX
R233A	266323	RES. C.F. 3.3K OHM 1/6W +/-5%	ELECTRICAL COMPONENTS	27V513T		18-CB0332-JNX
R233A	266323	RES. C.F. 3.3K OHM 1/6W +/-5%	ELECTRICAL COMPONENTS	24V511T		18-CB0332-JNX
R233A	266323	RES. C.F. 3.3K OHM 1/6W +/-5%	ELECTRICAL COMPONENTS	27F630T		18-CB0332-JNX
R233A	266323	RES. C.F. 3.3K OHM 1/6W +/-5%	ELECTRICAL COMPONENTS	27V512T		18-CB0332-JNX
R233A	266323	RES. C.F. 3.3K OHM 1/6W +/-5%	ELECTRICAL COMPONENTS	27F520T		18-CB0332-JNX
R234	266593	RES. C.F. 330 OHM 1/6W +/-5%	ELECTRICAL COMPONENTS	27V520T		18-CB0331-JNX
R234	266593	RES. C.F. 330 OHM 1/6W +/-5%	ELECTRICAL COMPONENTS	24V511T		18-CB0331-JNX
R234	266593	RES. C.F. 330 OHM 1/6W +/-5%	ELECTRICAL COMPONENTS	27V512T		18-CB0331-JNX
R234	266593	RES. C.F. 330 OHM 1/6W +/-5%	ELECTRICAL COMPONENTS	27F520T		18-CB0331-JNX
R234	266593	RES. C.F. 330 OHM 1/6W +/-5%	ELECTRICAL COMPONENTS	27V513T		18-CB0331-JNX
R234	266593	RES. C.F. 330 OHM 1/6W +/-5%	ELECTRICAL COMPONENTS	24F512T		18-CB0331-JNX
R234	266593	RES. C.F. 330 OHM 1/6W +/-5%	ELECTRICAL COMPONENTS	27F630T		18-CB0331-JNX
R235	266601	RES. C.F. 120 OHM 1/6W +/-5%	ELECTRICAL COMPONENTS	27F630T		18-CB0121-JNX
R235	266601	RES. C.F. 120 OHM 1/6W +/-5%	ELECTRICAL COMPONENTS	27F520T		18-CB0121-JNX
R235	266601	RES. C.F. 120 OHM 1/6W +/-5%	ELECTRICAL COMPONENTS	27V520T		18-CB0121-JNX
R235	266601	RES. C.F. 120 OHM 1/6W +/-5%	ELECTRICAL COMPONENTS	27V513T		18-CB0121-JNX
R235	266601	RES. C.F. 120 OHM 1/6W +/-5%	ELECTRICAL COMPONENTS	24V511T		18-CB0121-JNX
R235	266601	RES. C.F. 120 OHM 1/6W +/-5%	ELECTRICAL COMPONENTS	27V512T		18-CB0121-JNX
R235	266601	RES. C.F. 120 OHM 1/6W +/-5%	ELECTRICAL COMPONENTS	24F512T		18-CB0121-JNX
R238	266370	RES. C.F. 470 OHM 1/6W +/-5%	ELECTRICAL COMPONENTS	27F520T		18-CB0471-JNX
R238	266370	RES. C.F. 470 OHM 1/6W +/-5%	ELECTRICAL COMPONENTS	24F512T		18-CB0471-JNX
R238	266370	RES. C.F. 470 OHM 1/6W +/-5%	ELECTRICAL COMPONENTS	27V512T		18-CB0471-JNX
R238	266370	RES. C.F. 470 OHM 1/6W +/-5%	ELECTRICAL COMPONENTS	27V513T		18-CB0471-JNX
R238	266370	RES. C.F. 470 OHM 1/6W +/-5%	ELECTRICAL COMPONENTS	27F630T		18-CB0471-JNX
R238	266370	RES. C.F. 470 OHM 1/6W +/-5%	ELECTRICAL COMPONENTS	24V511T		18-CB0471-JNX
R238	266370	RES. C.F. 470 OHM 1/6W +/-5%	ELECTRICAL COMPONENTS	27V520T		18-CB0471-JNX
R239	266255	RES. C.F. 1K OHM 1/6W +/-5%	ELECTRICAL COMPONENTS	27F630T		18-CB0102-JNX
R239	266255	RES. C.F. 1K OHM 1/6W +/-5%	ELECTRICAL COMPONENTS	27V512T		18-CB0102-JNX
R239	266255	RES. C.F. 1K OHM 1/6W +/-5%	ELECTRICAL COMPONENTS	27F520T		18-CB0102-JNX
R239	266255	RES. C.F. 1K OHM 1/6W +/-5%	ELECTRICAL COMPONENTS	24V511T		18-CB0102-JNX
R239	266255	RES. C.F. 1K OHM 1/6W +/-5%	ELECTRICAL COMPONENTS	27V513T		18-CB0102-JNX
R239	266255	RES. C.F. 1K OHM 1/6W +/-5%	ELECTRICAL COMPONENTS	24F512T		18-CB0102-JNX

Symbol	Stock	Description	Circuit	Model	TypeCode	Drawing
R239	266255	RES. C.F. 1K OHM 1/6W +/-5%	ELECTRICAL COMPONENTS	27V520T		18-CB0102-JNX
R241	266600	RES. C.F. 270 OHM 1/6W +/-5%	ELECTRICAL COMPONENTS	24F512T		18-CB0271-JNX
R241	266600	RES. C.F. 270 OHM 1/6W +/-5%	ELECTRICAL COMPONENTS	27V513T		18-CB0271-JNX
R241	266600	RES. C.F. 270 OHM 1/6W +/-5%	ELECTRICAL COMPONENTS	24V511T		18-CB0271-JNX
R241	266600	RES. C.F. 270 OHM 1/6W +/-5%	ELECTRICAL COMPONENTS	27V512T		18-CB0271-JNX
R241	266600	RES. C.F. 270 OHM 1/6W +/-5%	ELECTRICAL COMPONENTS	27F630T		18-CB0271-JNX
R241	266600	RES. C.F. 270 OHM 1/6W +/-5%	ELECTRICAL COMPONENTS	27F520T		18-CB0271-JNX
R241	266600	RES. C.F. 270 OHM 1/6W +/-5%	ELECTRICAL COMPONENTS	27V520T		18-CB0271-JNX
R242	266253	RES. C.F. 100 OHM 1/6W +/-5%	ELECTRICAL COMPONENTS	24F512T		18-CB0101-JNX
R242	266253	RES. C.F. 100 OHM 1/6W +/-5%	ELECTRICAL COMPONENTS	27F520T		18-CB0101-JNX
R242	266253	RES. C.F. 100 OHM 1/6W +/-5%	ELECTRICAL COMPONENTS	27F630T		18-CB0101-JNX
R242	266253	RES. C.F. 100 OHM 1/6W +/-5%	ELECTRICAL COMPONENTS	27V520T		18-CB0101-JNX
R243	266253	RES. C.F. 100 OHM 1/6W +/-5%	ELECTRICAL COMPONENTS	27V520T		18-CB0101-JNX
R243	266253	RES. C.F. 100 OHM 1/6W +/-5%	ELECTRICAL COMPONENTS	27F630T		18-CB0101-JNX
R243	266253	RES. C.F. 100 OHM 1/6W +/-5%	ELECTRICAL COMPONENTS	27F520T		18-CB0101-JNX
R243	266253	RES. C.F. 100 OHM 1/6W +/-5%	ELECTRICAL COMPONENTS	24F512T		18-CB0101-JNX
R244	266916	RES. C.F. 10 OHM 1/6W +/-5%	ELECTRICAL COMPONENTS	27V512T		18-CB0100-JNX
R244	266916	RES. C.F. 10 OHM 1/6W +/-5%	ELECTRICAL COMPONENTS	27F630T		18-CB0100-JNX
R244	266916	RES. C.F. 10 OHM 1/6W +/-5%	ELECTRICAL COMPONENTS	27V513T		18-CB0100-JNX
R244	266916	RES. C.F. 10 OHM 1/6W +/-5%	ELECTRICAL COMPONENTS	27F520T		18-CB0100-JNX
R244	266916	RES. C.F. 10 OHM 1/6W +/-5%	ELECTRICAL COMPONENTS	24F512T		18-CB0100-JNX
R244	266916	RES. C.F. 10 OHM 1/6W +/-5%	ELECTRICAL COMPONENTS	27V520T		18-CB0100-JNX
R244	266916	RES. C.F. 10 OHM 1/6W +/-5%	ELECTRICAL COMPONENTS	24V511T		18-CB0100-JNX
R245	266253	RES. C.F. 100 OHM 1/6W +/-5%	ELECTRICAL COMPONENTS	24V511T		18-CB0101-JNX
R245	266253	RES. C.F. 100 OHM 1/6W +/-5%	ELECTRICAL COMPONENTS	27V513T		18-CB0101-JNX
R245	266253	RES. C.F. 100 OHM 1/6W +/-5%	ELECTRICAL COMPONENTS	27V520T		18-CB0101-JNX
R245	266253	RES. C.F. 100 OHM 1/6W +/-5%	ELECTRICAL COMPONENTS	24F512T		18-CB0101-JNX
R245	266253	RES. C.F. 100 OHM 1/6W +/-5%	ELECTRICAL COMPONENTS	27F630T		18-CB0101-JNX
R245	266253	RES. C.F. 100 OHM 1/6W +/-5%	ELECTRICAL COMPONENTS	27F520T		18-CB0101-JNX
R245	266253	RES. C.F. 100 OHM 1/6W +/-5%	ELECTRICAL COMPONENTS	27V512T		18-CB0101-JNX
R246	266380	RES. C.F. 8.2K OHM 1/6W +/-5%	ELECTRICAL COMPONENTS	24V511T		18-CB0822-JNX
R246	266380	RES. C.F. 8.2K OHM 1/6W +/-5%	ELECTRICAL COMPONENTS	24F512T		18-CB0822-JNX
R246	266380	RES. C.F. 8.2K OHM 1/6W +/-5%	ELECTRICAL COMPONENTS	27F630T		18-CB0822-JNX
R246	266380	RES. C.F. 8.2K OHM 1/6W +/-5%	ELECTRICAL COMPONENTS	27F520T		18-CB0822-JNX
R246	266380	RES. C.F. 8.2K OHM 1/6W +/-5%	ELECTRICAL COMPONENTS	27V520T		18-CB0822-JNX
R246	266380	RES. C.F. 8.2K OHM 1/6W +/-5%	ELECTRICAL COMPONENTS	27V512T		18-CB0822-JNX
R246	266380	RES. C.F. 8.2K OHM 1/6W +/-5%	ELECTRICAL COMPONENTS	27V513T		18-CB0822-JNX
R247	266593	RES. C.F. 330 OHM 1/6W +/-5%	ELECTRICAL COMPONENTS	27F630T		18-CB0331-JNX
R247	266593	RES. C.F. 330 OHM 1/6W +/-5%	ELECTRICAL COMPONENTS	24F512T		18-CB0331-JNX
R247	266593	RES. C.F. 330 OHM 1/6W +/-5%	ELECTRICAL COMPONENTS	27V520T		18-CB0331-JNX
R247	266593	RES. C.F. 330 OHM 1/6W +/-5%	ELECTRICAL COMPONENTS	27V513T		18-CB0331-JNX
R247	266593	RES. C.F. 330 OHM 1/6W +/-5%	ELECTRICAL COMPONENTS	27V512T		18-CB0331-JNX
R247	266593	RES. C.F. 330 OHM 1/6W +/-5%	ELECTRICAL COMPONENTS	27F520T		18-CB0331-JNX
R247	266593	RES. C.F. 330 OHM 1/6W +/-5%	ELECTRICAL COMPONENTS	24V511T		18-CB0331-JNX
R248	266255	RES. C.F. 1K OHM 1/6W +/-5%	ELECTRICAL COMPONENTS	27F520T		18-CB0102-JNX
R248	266255	RES. C.F. 1K OHM 1/6W +/-5%	ELECTRICAL COMPONENTS	27V520T		18-CB0102-JNX
R248	266255	RES. C.F. 1K OHM 1/6W +/-5%	ELECTRICAL COMPONENTS	24V511T		18-CB0102-JNX
R248	266255	RES. C.F. 1K OHM 1/6W +/-5%	ELECTRICAL COMPONENTS	27V513T		18-CB0102-JNX
R248	266255	RES. C.F. 1K OHM 1/6W +/-5%	ELECTRICAL COMPONENTS	24F512T		18-CB0102-JNX
R248	266255	RES. C.F. 1K OHM 1/6W +/-5%	ELECTRICAL COMPONENTS	27F630T		18-CB0102-JNX
R248	266255	RES. C.F. 1K OHM 1/6W +/-5%	ELECTRICAL COMPONENTS	27V512T		18-CB0102-JNX
R250	266365	RES. C.F. 220 OHM 1/6W +/-5%	ELECTRICAL COMPONENTS	27V512T		18-CB0221-JNX
R250	266365	RES. C.F. 220 OHM 1/6W +/-5%	ELECTRICAL COMPONENTS	27V520T		18-CB0221-JNX
R250	266365	RES. C.F. 220 OHM 1/6W +/-5%	ELECTRICAL COMPONENTS	24V511T		18-CB0221-JNX
R250	266365	RES. C.F. 220 OHM 1/6W +/-5%	ELECTRICAL COMPONENTS	27F520T		18-CB0221-JNX
R250	266365	RES. C.F. 220 OHM 1/6W +/-5%	ELECTRICAL COMPONENTS	27F630T		18-CB0221-JNX
R250	266365	RES. C.F. 220 OHM 1/6W +/-5%	ELECTRICAL COMPONENTS	24F512T		18-CB0221-JNX
R250	266365	RES. C.F. 220 OHM 1/6W +/-5%	ELECTRICAL COMPONENTS	27V513T		18-CB0221-JNX
R251	266370	RES. C.F. 470 OHM 1/6W +/-5%	ELECTRICAL COMPONENTS	24F512T		18-CB0471-JNX
R251	266370	RES. C.F. 470 OHM 1/6W +/-5%	ELECTRICAL COMPONENTS	24V511T		18-CB0471-JNX

Symbol	Stock	Description	Circuit	Model	TypeCode	Drawing
R251	266370	RES. C.F. 470 OHM 1/6W +/-5%	ELECTRICAL COMPONENTS	27V520T		18-CB0471-JNX
R251	266370	RES. C.F. 470 OHM 1/6W +/-5%	ELECTRICAL COMPONENTS	27V512T		18-CB0471-JNX
R251	266370	RES. C.F. 470 OHM 1/6W +/-5%	ELECTRICAL COMPONENTS	27V513T		18-CB0471-JNX
R251	266370	RES. C.F. 470 OHM 1/6W +/-5%	ELECTRICAL COMPONENTS	27F520T		18-CB0471-JNX
R251	266370	RES. C.F. 470 OHM 1/6W +/-5%	ELECTRICAL COMPONENTS	27F630T		18-CB0471-JNX
R253	266596	RES. C.F. 100K OHM 1/6W +/-5%	ELECTRICAL COMPONENTS	27F630T		18-CB0104-JNX
R253	266596	RES. C.F. 100K OHM 1/6W +/-5%	ELECTRICAL COMPONENTS	24V511T		18-CB0104-JNX
R253	266596	RES. C.F. 100K OHM 1/6W +/-5%	ELECTRICAL COMPONENTS	27V512T		18-CB0104-JNX
R253	266596	RES. C.F. 100K OHM 1/6W +/-5%	ELECTRICAL COMPONENTS	27V513T		18-CB0104-JNX
R253	266596	RES. C.F. 100K OHM 1/6W +/-5%	ELECTRICAL COMPONENTS	27V520T		18-CB0104-JNX
R253	266596	RES. C.F. 100K OHM 1/6W +/-5%	ELECTRICAL COMPONENTS	24F512T		18-CB0104-JNX
R253	266596	RES. C.F. 100K OHM 1/6W +/-5%	ELECTRICAL COMPONENTS	27F520T		18-CB0104-JNX
R254	266596	RES. C.F. 100K OHM 1/6W +/-5%	ELECTRICAL COMPONENTS	27V513T		18-CB0104-JNX
R254	266596	RES. C.F. 100K OHM 1/6W +/-5%	ELECTRICAL COMPONENTS	27V512T		18-CB0104-JNX
R254	266596	RES. C.F. 100K OHM 1/6W +/-5%	ELECTRICAL COMPONENTS	24F512T		18-CB0104-JNX
R254	266596	RES. C.F. 100K OHM 1/6W +/-5%	ELECTRICAL COMPONENTS	24V511T		18-CB0104-JNX
R254	266596	RES. C.F. 100K OHM 1/6W +/-5%	ELECTRICAL COMPONENTS	27F630T		18-CB0104-JNX
R254	266596	RES. C.F. 100K OHM 1/6W +/-5%	ELECTRICAL COMPONENTS	27F520T		18-CB0104-JNX
R254	266596	RES. C.F. 100K OHM 1/6W +/-5%	ELECTRICAL COMPONENTS	27V520T		18-CB0104-JNX
R255	266383	RES. C.F. 22K OHM 1/6W +/-5%	ELECTRICAL COMPONENTS	27V520T		18-CB0223-JNX
R255	266383	RES. C.F. 22K OHM 1/6W +/-5%	ELECTRICAL COMPONENTS	24V511T		18-CB0223-JNX
R255	266383	RES. C.F. 22K OHM 1/6W +/-5%	ELECTRICAL COMPONENTS	27F520T		18-CB0223-JNX
R255	266383	RES. C.F. 22K OHM 1/6W +/-5%	ELECTRICAL COMPONENTS	27V512T		18-CB0223-JNX
R255	266383	RES. C.F. 22K OHM 1/6W +/-5%	ELECTRICAL COMPONENTS	24F512T		18-CB0223-JNX
R255	266383	RES. C.F. 22K OHM 1/6W +/-5%	ELECTRICAL COMPONENTS	27V513T		18-CB0223-JNX
R255	266383	RES. C.F. 22K OHM 1/6W +/-5%	ELECTRICAL COMPONENTS	27F630T		18-CB0223-JNX
R256	268379	RES. C.F. 5.6K OHM 1/6W +/-5%	ELECTRICAL COMPONENTS	27V512T		18-CB0562-JNX
R256	268379	RES. C.F. 5.6K OHM 1/6W +/-5%	ELECTRICAL COMPONENTS	27V513T		18-CB0562-JNX
R256	268379	RES. C.F. 5.6K OHM 1/6W +/-5%	ELECTRICAL COMPONENTS	24V511T		18-CB0562-JNX
R256	268379	RES. C.F. 5.6K OHM 1/6W +/-5%	ELECTRICAL COMPONENTS	27V520T		18-CB0562-JNX
R256	268379	RES. C.F. 5.6K OHM 1/6W +/-5%	ELECTRICAL COMPONENTS	27F520T		18-CB0562-JNX
R256	268379	RES. C.F. 5.6K OHM 1/6W +/-5%	ELECTRICAL COMPONENTS	24F512T		18-CB0562-JNX
R256	268379	RES. C.F. 5.6K OHM 1/6W +/-5%	ELECTRICAL COMPONENTS	27F630T		18-CB0562-JNX
R257	266285	RES. C.F. 4.7K OHM 1/6W +/-5%	ELECTRICAL COMPONENTS	27V520T		18-CB0472-JNX
R257	266285	RES. C.F. 4.7K OHM 1/6W +/-5%	ELECTRICAL COMPONENTS	27V512T		18-CB0472-JNX
R257	266285	RES. C.F. 4.7K OHM 1/6W +/-5%	ELECTRICAL COMPONENTS	27V513T		18-CB0472-JNX
R257	266285	RES. C.F. 4.7K OHM 1/6W +/-5%	ELECTRICAL COMPONENTS	27F520T		18-CB0472-JNX
R257	266285	RES. C.F. 4.7K OHM 1/6W +/-5%	ELECTRICAL COMPONENTS	24V511T		18-CB0472-JNX
R257	266285	RES. C.F. 4.7K OHM 1/6W +/-5%	ELECTRICAL COMPONENTS	27F630T		18-CB0472-JNX
R257	266285	RES. C.F. 4.7K OHM 1/6W +/-5%	ELECTRICAL COMPONENTS	24F512T		18-CB0472-JNX
R258	266368	RES. C.F. 150 OHM 1/6W +/-5%	ELECTRICAL COMPONENTS	24F512T		18-CB0151-JNX
R258	266368	RES. C.F. 150 OHM 1/6W +/-5%	ELECTRICAL COMPONENTS	24V511T		18-CB0151-JNX
R258	266368	RES. C.F. 150 OHM 1/6W +/-5%	ELECTRICAL COMPONENTS	27F630T		18-CB0151-JNX
R258	266368	RES. C.F. 150 OHM 1/6W +/-5%	ELECTRICAL COMPONENTS	27V520T		18-CB0151-JNX
R258	266368	RES. C.F. 150 OHM 1/6W +/-5%	ELECTRICAL COMPONENTS	27F520T		18-CB0151-JNX
R258	266368	RES. C.F. 150 OHM 1/6W +/-5%	ELECTRICAL COMPONENTS	27V512T		18-CB0151-JNX
R258	266368	RES. C.F. 150 OHM 1/6W +/-5%	ELECTRICAL COMPONENTS	27V513T		18-CB0151-JNX
R261	266593	RES. C.F. 330 OHM 1/6W +/-5%	ELECTRICAL COMPONENTS	27F630T		18-CB0331-JNX
R261	266593	RES. C.F. 330 OHM 1/6W +/-5%	ELECTRICAL COMPONENTS	27F520T		18-CB0331-JNX
R261	266593	RES. C.F. 330 OHM 1/6W +/-5%	ELECTRICAL COMPONENTS	27V512T		18-CB0331-JNX
R261	266593	RES. C.F. 330 OHM 1/6W +/-5%	ELECTRICAL COMPONENTS	27V520T		18-CB0331-JNX
R261	266593	RES. C.F. 330 OHM 1/6W +/-5%	ELECTRICAL COMPONENTS	27V513T		18-CB0331-JNX
R261	266593	RES. C.F. 330 OHM 1/6W +/-5%	ELECTRICAL COMPONENTS	24V511T		18-CB0331-JNX
R261	266593	RES. C.F. 330 OHM 1/6W +/-5%	ELECTRICAL COMPONENTS	24F512T		18-CB0331-JNX
R262	266917	RES. C.F. 1.2K OHM 1/6W +/-5%	ELECTRICAL COMPONENTS	27F630T		18-CB0122-JNX
R262	266917	RES. C.F. 1.2K OHM 1/6W +/-5%	ELECTRICAL COMPONENTS	27V513T		18-CB0122-JNX
R262	266917	RES. C.F. 1.2K OHM 1/6W +/-5%	ELECTRICAL COMPONENTS	27F520T		18-CB0122-JNX
R262	266917	RES. C.F. 1.2K OHM 1/6W +/-5%	ELECTRICAL COMPONENTS	24V511T		18-CB0122-JNX
R262	266917	RES. C.F. 1.2K OHM 1/6W +/-5%	ELECTRICAL COMPONENTS	27V512T		18-CB0122-JNX
R262	266917	RES. C.F. 1.2K OHM 1/6W +/-5%	ELECTRICAL COMPONENTS	24F512T		18-CB0122-JNX

Symbol	Stock	Description	Circuit	Model	TypeCode	Drawing
R262	266917	RES. C.F. 1.2K OHM 1/6W +/-5%	ELECTRICAL COMPONENTS	27V520T		18-CB0122-JNX
R266	268380	RES. M.O. 22K OHM 2W +/-5%	ELECTRICAL COMPONENTS	27F630T		18-FG0223-JHX
R266	268380	RES. M.O. 22K OHM 2W +/-5%	ELECTRICAL COMPONENTS	27V513T		18-FG0223-JHX
R266	268380	RES. M.O. 22K OHM 2W +/-5%	ELECTRICAL COMPONENTS	24F512T		18-FG0223-JHX
R266	268380	RES. M.O. 22K OHM 2W +/-5%	ELECTRICAL COMPONENTS	24V511T		18-FG0223-JHX
R266	268380	RES. M.O. 22K OHM 2W +/-5%	ELECTRICAL COMPONENTS	27F520T		18-FG0223-JHX
R266	268380	RES. M.O. 22K OHM 2W +/-5%	ELECTRICAL COMPONENTS	27V512T		18-FG0223-JHX
R266	268380	RES. M.O. 22K OHM 2W +/-5%	ELECTRICAL COMPONENTS	27V520T		18-FG0223-JHX
R302	268381	RES. M.F. 3.9K OHM 1/4W +/-1%	ELECTRICAL COMPONENTS	27F630T		18-DD0392-FNX
R302	268381	RES. M.F. 3.9K OHM 1/4W +/-1%	ELECTRICAL COMPONENTS	27F520T		18-DD0392-FNX
R302	268381	RES. M.F. 3.9K OHM 1/4W +/-1%	ELECTRICAL COMPONENTS	24V511T		18-DD0392-FNX
R302	268381	RES. M.F. 3.9K OHM 1/4W +/-1%	ELECTRICAL COMPONENTS	27V512T		18-DD0392-FNX
R302	268381	RES. M.F. 3.9K OHM 1/4W +/-1%	ELECTRICAL COMPONENTS	27V513T		18-DD0392-FNX
R302	268381	RES. M.F. 3.9K OHM 1/4W +/-1%	ELECTRICAL COMPONENTS	27V520T		18-DD0392-FNX
R302	268381	RES. M.F. 3.9K OHM 1/4W +/-1%	ELECTRICAL COMPONENTS	24F512T		18-DD0392-FNX
R303	268429	RES. M.F 36K OHM 1/4W +/-1%	ELECTRICAL COMPONENTS	27V512T		18-DD0363-FNX
R303	268429	RES. M.F 36K OHM 1/4W +/-1%	ELECTRICAL COMPONENTS	27V520T		18-DD0363-FNX
R303	268429	RES. M.F 36K OHM 1/4W +/-1%	ELECTRICAL COMPONENTS	27V513T		18-DD0363-FNX
R303	268382	RES. M.F 33K OHM 1/4W +/-1%	ELECTRICAL COMPONENTS	27F520T		18-DD0333-FNX
R303	268429	RES. M.F 36K OHM 1/4W +/-1%	ELECTRICAL COMPONENTS	24V511T		18-DD0363-FNX
R303	268382	RES. M.F 33K OHM 1/4W +/-1%	ELECTRICAL COMPONENTS	24F512T		18-DD0333-FNX
R303	268382	RES. M.F 33K OHM 1/4W +/-1%	ELECTRICAL COMPONENTS	27F630T		18-DD0333-FNX
R304	268383	RES. WIRE ROUND 0.68 OHM 1W +/	ELECTRICAL COMPONENTS	27F520T		18-RF0688-JGX
R304	268383	RES. WIRE ROUND 0.68 OHM 1W +/	ELECTRICAL COMPONENTS	24V511T		18-RF0688-JGX
R304	268383	RES. WIRE ROUND 0.68 OHM 1W +/	ELECTRICAL COMPONENTS	27V513T		18-RF0688-JGX
R304	268383	RES. WIRE ROUND 0.68 OHM 1W +/	ELECTRICAL COMPONENTS	27V520T		18-RF0688-JGX
R304	268383	RES. WIRE ROUND 0.68 OHM 1W +/	ELECTRICAL COMPONENTS	27F630T		18-RF0688-JGX
R304	268383	RES. WIRE ROUND 0.68 OHM 1W +/	ELECTRICAL COMPONENTS	24F512T		18-RF0688-JGX
R304	268383	RES. WIRE ROUND 0.68 OHM 1W +/	ELECTRICAL COMPONENTS	27V512T		18-RF0688-JGX
R309	268384	RES. M.O. 330 OHM 1W +/-5%	ELECTRICAL COMPONENTS	27F520T		18-FF0331-JGX
R309	268384	RES. M.O. 330 OHM 1W +/-5%	ELECTRICAL COMPONENTS	27V513T		18-FF0331-JGX
R309	268384	RES. M.O. 330 OHM 1W +/-5%	ELECTRICAL COMPONENTS	27V512T		18-FF0331-JGX
R309	268384	RES. M.O. 330 OHM 1W +/-5%	ELECTRICAL COMPONENTS	24V511T		18-FF0331-JGX
R309	268384	RES. M.O. 330 OHM 1W +/-5%	ELECTRICAL COMPONENTS	24F512T		18-FF0331-JGX
R309	268384	RES. M.O. 330 OHM 1W +/-5%	ELECTRICAL COMPONENTS	27V520T		18-FF0331-JGX
R309	268384	RES. M.O. 330 OHM 1W +/-5%	ELECTRICAL COMPONENTS	27F630T		18-FF0331-JGX
R310	266322	RES. C.F. 10K OHM 1/6W +/-5%	ELECTRICAL COMPONENTS	27V513T		18-CB0103-JNX
R310	266322	RES. C.F. 10K OHM 1/6W +/-5%	ELECTRICAL COMPONENTS	27F520T		18-CB0103-JNX
R310	266322	RES. C.F. 10K OHM 1/6W +/-5%	ELECTRICAL COMPONENTS	24F512T		18-CB0103-JNX
R310	266322	RES. C.F. 10K OHM 1/6W +/-5%	ELECTRICAL COMPONENTS	24V511T		18-CB0103-JNX
R310	266322	RES. C.F. 10K OHM 1/6W +/-5%	ELECTRICAL COMPONENTS	27V520T		18-CB0103-JNX
R310	266322	RES. C.F. 10K OHM 1/6W +/-5%	ELECTRICAL COMPONENTS	27F630T		18-CB0103-JNX
R310	266322	RES. C.F. 10K OHM 1/6W +/-5%	ELECTRICAL COMPONENTS	27V512T		18-CB0103-JNX
R311	268385	RES. M.F. 10K OHM 1/4W +/-1%	ELECTRICAL COMPONENTS	24F512T		18-DD0103-FNX
R311	268385	RES. M.F. 10K OHM 1/4W +/-1%	ELECTRICAL COMPONENTS	27V520T		18-DD0103-FNX
R311	268385	RES. M.F. 10K OHM 1/4W +/-1%	ELECTRICAL COMPONENTS	27V513T		18-DD0103-FNX
R311	268385	RES. M.F. 10K OHM 1/4W +/-1%	ELECTRICAL COMPONENTS	27F630T		18-DD0103-FNX
R311	268385	RES. M.F. 10K OHM 1/4W +/-1%	ELECTRICAL COMPONENTS	27V512T		18-DD0103-FNX
R311	268385	RES. M.F. 10K OHM 1/4W +/-1%	ELECTRICAL COMPONENTS	24V511T		18-DD0103-FNX
R311	268385	RES. M.F. 10K OHM 1/4W +/-1%	ELECTRICAL COMPONENTS	27F520T		18-DD0103-FNX
R312	268386	RES. M.F. 18K OHM 1/4W +/-1%	ELECTRICAL COMPONENTS	24V511T		18-DD0183-FNX
R312	268386	RES. M.F. 18K OHM 1/4W +/-1%	ELECTRICAL COMPONENTS	27V513T		18-DD0183-FNX
R312	268386	RES. M.F. 18K OHM 1/4W +/-1%	ELECTRICAL COMPONENTS	27V512T		18-DD0183-FNX
R312	268386	RES. M.F. 18K OHM 1/4W +/-1%	ELECTRICAL COMPONENTS	24F512T		18-DD0183-FNX
R312	268386	RES. M.F. 18K OHM 1/4W +/-1%	ELECTRICAL COMPONENTS	27F520T		18-DD0183-FNX
R312	268386	RES. M.F. 18K OHM 1/4W +/-1%	ELECTRICAL COMPONENTS	27V520T		18-DD0183-FNX
R312	268386	RES. M.F. 18K OHM 1/4W +/-1%	ELECTRICAL COMPONENTS	27F630T		18-DD0183-FNX
R313	268387	RES. WIRE ROUND 1.5 OHM 2W +/-	ELECTRICAL COMPONENTS	27F520T		18-RG0159-JHX1
R313	268387	RES. WIRE ROUND 1.5 OHM 2W +/-	ELECTRICAL COMPONENTS	27F630T		18-RG0159-JHX1
R313	268387	RES. WIRE ROUND 1.5 OHM 2W +/-	ELECTRICAL COMPONENTS	24F512T		18-RG0159-JHX1

Symbol	Stock	Description	Circuit	Model	TypeCode	Drawing
R313	268387	RES. WIRE ROUND 1.5 OHM 2W +/-	ELECTRICAL COMPONENTS	27V512T		18-RG0159-JHX1
R313	268387	RES. WIRE ROUND 1.5 OHM 2W +/-	ELECTRICAL COMPONENTS	27V520T		18-RG0159-JHX1
R313	268387	RES. WIRE ROUND 1.5 OHM 2W +/-	ELECTRICAL COMPONENTS	27V513T		18-RG0159-JHX1
R313	268387	RES. WIRE ROUND 1.5 OHM 2W +/-	ELECTRICAL COMPONENTS	24V511T		18-RG0159-JHX1
R314	266322	RES. C.F. 10K OHM 1/6W +/-5%	ELECTRICAL COMPONENTS	27V520T		18-CB0103-JNX
R314	266322	RES. C.F. 10K OHM 1/6W +/-5%	ELECTRICAL COMPONENTS	27V512T		18-CB0103-JNX
R314	266322	RES. C.F. 10K OHM 1/6W +/-5%	ELECTRICAL COMPONENTS	24F512T		18-CB0103-JNX
R314	266322	RES. C.F. 10K OHM 1/6W +/-5%	ELECTRICAL COMPONENTS	27V513T		18-CB0103-JNX
R314	266322	RES. C.F. 10K OHM 1/6W +/-5%	ELECTRICAL COMPONENTS	27F520T		18-CB0103-JNX
R314	266322	RES. C.F. 10K OHM 1/6W +/-5%	ELECTRICAL COMPONENTS	24V511T		18-CB0103-JNX
R314	266322	RES. C.F. 10K OHM 1/6W +/-5%	ELECTRICAL COMPONENTS	27F630T		18-CB0103-JNX
R316	268388	RES. C.F. 10K OHM 1/2W +/-5%	ELECTRICAL COMPONENTS	27F520T		18-CE0103-JNX
R316	268388	RES. C.F. 10K OHM 1/2W +/-5%	ELECTRICAL COMPONENTS	24F512T		18-CE0103-JNX
R316	268388	RES. C.F. 10K OHM 1/2W +/-5%	ELECTRICAL COMPONENTS	24V511T		18-CE0103-JNX
R316	268388	RES. C.F. 10K OHM 1/2W +/-5%	ELECTRICAL COMPONENTS	27F630T		18-CE0103-JNX
R316	268388	RES. C.F. 10K OHM 1/2W +/-5%	ELECTRICAL COMPONENTS	27V520T		18-CE0103-JNX
R316	268388	RES. C.F. 10K OHM 1/2W +/-5%	ELECTRICAL COMPONENTS	27V513T		18-CE0103-JNX
R316	268388	RES. C.F. 10K OHM 1/2W +/-5%	ELECTRICAL COMPONENTS	27V512T		18-CE0103-JNX
R401	266365	RES. C.F. 220 OHM 1/6W +/-5%	ELECTRICAL COMPONENTS	27V520T		18-CB0221-JNX
R401	266365	RES. C.F. 220 OHM 1/6W +/-5%	ELECTRICAL COMPONENTS	27F630T		18-CB0221-JNX
R401	266365	RES. C.F. 220 OHM 1/6W +/-5%	ELECTRICAL COMPONENTS	24F512T		18-CB0221-JNX
R401	266365	RES. C.F. 220 OHM 1/6W +/-5%	ELECTRICAL COMPONENTS	24V511T		18-CB0221-JNX
R401	266365	RES. C.F. 220 OHM 1/6W +/-5%	ELECTRICAL COMPONENTS	27V512T		18-CB0221-JNX
R401	266365	RES. C.F. 220 OHM 1/6W +/-5%	ELECTRICAL COMPONENTS	27F520T		18-CB0221-JNX
R401	266365	RES. C.F. 220 OHM 1/6W +/-5%	ELECTRICAL COMPONENTS	27V513T		18-CB0221-JNX
R402	268389	RES. M.O. 2.4K OHM 1W +/-5%	ELECTRICAL COMPONENTS	27V512T		18-FF0242-JGX
R402	268389	RES. M.O. 2.4K OHM 1W +/-5%	ELECTRICAL COMPONENTS	27F520T		18-FF0242-JGX
R402	268389	RES. M.O. 2.4K OHM 1W +/-5%	ELECTRICAL COMPONENTS	24V511T		18-FF0242-JGX
R402	268389	RES. M.O. 2.4K OHM 1W +/-5%	ELECTRICAL COMPONENTS	27F630T		18-FF0242-JGX
R402	268389	RES. M.O. 2.4K OHM 1W +/-5%	ELECTRICAL COMPONENTS	27V520T		18-FF0242-JGX
R402	268389	RES. M.O. 2.4K OHM 1W +/-5%	ELECTRICAL COMPONENTS	24F512T		18-FF0242-JGX
R402	268389	RES. M.O. 2.4K OHM 1W +/-5%	ELECTRICAL COMPONENTS	27V513T		18-FF0242-JGX
R404	268390	RES. CEMENT 4K7 OHM 7W +/-5%	ELECTRICAL COMPONENTS	24V511T		18-GM0472-JUX1
R404	268390	RES. CEMENT 4K7 OHM 7W +/-5%	ELECTRICAL COMPONENTS	27F630T		18-GM0472-JUX1
R404	268390	RES. CEMENT 4K7 OHM 7W +/-5%	ELECTRICAL COMPONENTS	27V512T		18-GM0472-JUX1
R404	268390	RES. CEMENT 4K7 OHM 7W +/-5%	ELECTRICAL COMPONENTS	27F520T		18-GM0472-JUX1
R404	268390	RES. CEMENT 4K7 OHM 7W +/-5%	ELECTRICAL COMPONENTS	24F512T		18-GM0472-JUX1
R404	268390	RES. CEMENT 4K7 OHM 7W +/-5%	ELECTRICAL COMPONENTS	27V513T		18-GM0472-JUX1
R404	268390	RES. CEMENT 4K7 OHM 7W +/-5%	ELECTRICAL COMPONENTS	27V520T		18-GM0472-JUX1
R412	268391	RES. C.F. 2K OHM 1/6W +/-5%	ELECTRICAL COMPONENTS	27V513T		18-CB0202-JNX
R412	268391	RES. C.F. 2K OHM 1/6W +/-5%	ELECTRICAL COMPONENTS	27F520T		18-CB0202-JNX
R412	268391	RES. C.F. 2K OHM 1/6W +/-5%	ELECTRICAL COMPONENTS	27F630T		18-CB0202-JNX
R412	268391	RES. C.F. 2K OHM 1/6W +/-5%	ELECTRICAL COMPONENTS	27V520T		18-CB0202-JNX
R412	268391	RES. C.F. 2K OHM 1/6W +/-5%	ELECTRICAL COMPONENTS	27V512T		18-CB0202-JNX
R412	268391	RES. C.F. 2K OHM 1/6W +/-5%	ELECTRICAL COMPONENTS	24F512T		18-CB0202-JNX
R412	266344	RES. C.F. 1.5K OHM 1/6W +/-5%	ELECTRICAL COMPONENTS	24V511T		18-CB0152-JNX
R413	266918	RES. C.F. 15K OHM 1/6W +/-5%	ELECTRICAL COMPONENTS	27V520T		18-CB0153-JNX
R413	266918	RES. C.F. 15K OHM 1/6W +/-5%	ELECTRICAL COMPONENTS	27V512T		18-CB0153-JNX
R413	266372	RES. C.F. 6.8K OHM 1/6W +/-5%	ELECTRICAL COMPONENTS	24V511T		18-CB0682-JNX
R413	266918	RES. C.F. 15K OHM 1/6W +/-5%	ELECTRICAL COMPONENTS	27F520T		18-CB0153-JNX
R413	266918	RES. C.F. 15K OHM 1/6W +/-5%	ELECTRICAL COMPONENTS	27F630T		18-CB0153-JNX
R413	266918	RES. C.F. 15K OHM 1/6W +/-5%	ELECTRICAL COMPONENTS	24F512T		18-CB0153-JNX
R413	266918	RES. C.F. 15K OHM 1/6W +/-5%	ELECTRICAL COMPONENTS	27V513T		18-CB0153-JNX
R414	266364	RES. C.F. 47K OHM 1/6W +/-5%	ELECTRICAL COMPONENTS	24F512T		18-CB0473-JNX
R414	266364	RES. C.F. 47K OHM 1/6W +/-5%	ELECTRICAL COMPONENTS	27F630T		18-CB0473-JNX
R414	266364	RES. C.F. 47K OHM 1/6W +/-5%	ELECTRICAL COMPONENTS	27F520T		18-CB0473-JNX
R414	266364	RES. C.F. 47K OHM 1/6W +/-5%	ELECTRICAL COMPONENTS	27V513T		18-CB0473-JNX
R414	266364	RES. C.F. 47K OHM 1/6W +/-5%	ELECTRICAL COMPONENTS	24V511T		18-CB0473-JNX
R414	266364	RES. C.F. 47K OHM 1/6W +/-5%	ELECTRICAL COMPONENTS	27V512T		18-CB0473-JNX
R414	266364	RES. C.F. 47K OHM 1/6W +/-5%	ELECTRICAL COMPONENTS	27V520T		18-CB0473-JNX

Symbol	Stock	Description	Circuit	Model	TypeCode	Drawing
R415	268392	RES. M.O. 3.9 OHM 2W +/-5%	ELECTRICAL COMPONENTS	27V520T		18-FG0399-JHX
R415	268392	RES. M.O. 3.9 OHM 2W +/-5%	ELECTRICAL COMPONENTS	27V512T		18-FG0399-JHX
R415	268392	RES. M.O. 3.9 OHM 2W +/-5%	ELECTRICAL COMPONENTS	27V513T		18-FG0399-JHX
R415	268392	RES. M.O. 3.9 OHM 2W +/-5%	ELECTRICAL COMPONENTS	27F520T		18-FG0399-JHX
R415	268392	RES. M.O. 3.9 OHM 2W +/-5%	ELECTRICAL COMPONENTS	24V511T		18-FG0399-JHX
R415	268392	RES. M.O. 3.9 OHM 2W +/-5%	ELECTRICAL COMPONENTS	27F630T		18-FG0399-JHX
R415	268392	RES. M.O. 3.9 OHM 2W +/-5%	ELECTRICAL COMPONENTS	24F512T		18-FG0399-JHX
R416	266285	RES. C.F. 4.7K OHM 1/6W +/-5%	ELECTRICAL COMPONENTS	27F520T		18-CB0472-JNX
R416	266285	RES. C.F. 4.7K OHM 1/6W +/-5%	ELECTRICAL COMPONENTS	27F630T		18-CB0472-JNX
R416	266285	RES. C.F. 4.7K OHM 1/6W +/-5%	ELECTRICAL COMPONENTS	27V520T		18-CB0472-JNX
R416	266285	RES. C.F. 4.7K OHM 1/6W +/-5%	ELECTRICAL COMPONENTS	24V511T		18-CB0472-JNX
R416	266285	RES. C.F. 4.7K OHM 1/6W +/-5%	ELECTRICAL COMPONENTS	27V512T		18-CB0472-JNX
R416	266285	RES. C.F. 4.7K OHM 1/6W +/-5%	ELECTRICAL COMPONENTS	27V513T		18-CB0472-JNX
R416	266285	RES. C.F. 4.7K OHM 1/6W +/-5%	ELECTRICAL COMPONENTS	24F512T		18-CB0472-JNX
R417	266271	RES. C.F. 2.2K OHM 1/6W +/-5%	ELECTRICAL COMPONENTS	24V511T		18-CB0222-JNX
R417	266271	RES. C.F. 2.2K OHM 1/6W +/-5%	ELECTRICAL COMPONENTS	24F512T		18-CB0222-JNX
R417	266271	RES. C.F. 2.2K OHM 1/6W +/-5%	ELECTRICAL COMPONENTS	27F520T		18-CB0222-JNX
R417	266271	RES. C.F. 2.2K OHM 1/6W +/-5%	ELECTRICAL COMPONENTS	27V512T		18-CB0222-JNX
R417	266271	RES. C.F. 2.2K OHM 1/6W +/-5%	ELECTRICAL COMPONENTS	27F630T		18-CB0222-JNX
R417	266271	RES. C.F. 2.2K OHM 1/6W +/-5%	ELECTRICAL COMPONENTS	27V513T		18-CB0222-JNX
R417	266271	RES. C.F. 2.2K OHM 1/6W +/-5%	ELECTRICAL COMPONENTS	27V520T		18-CB0222-JNX
R418	266372	RES. C.F. 6.8K OHM 1/6W +/-5%	ELECTRICAL COMPONENTS	27V512T		18-CB0682-JNX
R418	266372	RES. C.F. 6.8K OHM 1/6W +/-5%	ELECTRICAL COMPONENTS	27F630T		18-CB0682-JNX
R418	266372	RES. C.F. 6.8K OHM 1/6W +/-5%	ELECTRICAL COMPONENTS	24F512T		18-CB0682-JNX
R418	266372	RES. C.F. 6.8K OHM 1/6W +/-5%	ELECTRICAL COMPONENTS	27V513T		18-CB0682-JNX
R418	266372	RES. C.F. 6.8K OHM 1/6W +/-5%	ELECTRICAL COMPONENTS	27V520T		18-CB0682-JNX
R418	266372	RES. C.F. 6.8K OHM 1/6W +/-5%	ELECTRICAL COMPONENTS	27F520T		18-CB0682-JNX
R418	266372	RES. C.F. 6.8K OHM 1/6W +/-5%	ELECTRICAL COMPONENTS	24V511T		18-CB0682-JNX
R419	268393	RES. M.O. 680 OHM 1W +/-5%	ELECTRICAL COMPONENTS	27V520T		18-FF0681-JGX
R419	268393	RES. M.O. 680 OHM 1W +/-5%	ELECTRICAL COMPONENTS	24F512T		18-FF0681-JGX
R419	268393	RES. M.O. 680 OHM 1W +/-5%	ELECTRICAL COMPONENTS	27F520T		18-FF0681-JGX
R419	268393	RES. M.O. 680 OHM 1W +/-5%	ELECTRICAL COMPONENTS	24V511T		18-FF0681-JGX
R419	268393	RES. M.O. 680 OHM 1W +/-5%	ELECTRICAL COMPONENTS	27V512T		18-FF0681-JGX
R419	268393	RES. M.O. 680 OHM 1W +/-5%	ELECTRICAL COMPONENTS	27F630T		18-FF0681-JGX
R419	268393	RES. M.O. 680 OHM 1W +/-5%	ELECTRICAL COMPONENTS	27V513T		18-FF0681-JGX
R420	266271	RES. C.F. 2.2K OHM 1/6W +/-5%	ELECTRICAL COMPONENTS	27V512T		18-CB0222-JNX
R420	266271	RES. C.F. 2.2K OHM 1/6W +/-5%	ELECTRICAL COMPONENTS	27F520T		18-CB0222-JNX
R420	266271	RES. C.F. 2.2K OHM 1/6W +/-5%	ELECTRICAL COMPONENTS	24V511T		18-CB0222-JNX
R420	266271	RES. C.F. 2.2K OHM 1/6W +/-5%	ELECTRICAL COMPONENTS	24F512T		18-CB0222-JNX
R420	266271	RES. C.F. 2.2K OHM 1/6W +/-5%	ELECTRICAL COMPONENTS	27V513T		18-CB0222-JNX
R420	266271	RES. C.F. 2.2K OHM 1/6W +/-5%	ELECTRICAL COMPONENTS	27V520T		18-CB0222-JNX
R420	266271	RES. C.F. 2.2K OHM 1/6W +/-5%	ELECTRICAL COMPONENTS	27F630T		18-CB0222-JNX
R420A	266271	RES. C.F. 2.2K OHM 1/6W +/-5%	ELECTRICAL COMPONENTS	27F520T		18-CB0222-JNX
R420A	266271	RES. C.F. 2.2K OHM 1/6W +/-5%	ELECTRICAL COMPONENTS	27V513T		18-CB0222-JNX
R420A	266271	RES. C.F. 2.2K OHM 1/6W +/-5%	ELECTRICAL COMPONENTS	27V520T		18-CB0222-JNX
R420A	266271	RES. C.F. 2.2K OHM 1/6W +/-5%	ELECTRICAL COMPONENTS	24V511T		18-CB0222-JNX
R420A	266271	RES. C.F. 2.2K OHM 1/6W +/-5%	ELECTRICAL COMPONENTS	27V512T		18-CB0222-JNX
R420A	266271	RES. C.F. 2.2K OHM 1/6W +/-5%	ELECTRICAL COMPONENTS	24F512T		18-CB0222-JNX
R420A	266271	RES. C.F. 2.2K OHM 1/6W +/-5%	ELECTRICAL COMPONENTS	27F630T		18-CB0222-JNX
R422	268404	RES. WIRE ROUND 0.47 OHM 2W +/	ELECTRICAL COMPONENTS	27V512T		18-RG0478-JHX
R422	268404	RES. WIRE ROUND 0.47 OHM 2W +/	ELECTRICAL COMPONENTS	27V520T		18-RG0478-JHX
R422	268404	RES. WIRE ROUND 0.47 OHM 2W +/	ELECTRICAL COMPONENTS	27F630T		18-RG0478-JHX
R422	268404	RES. WIRE ROUND 0.47 OHM 2W +/	ELECTRICAL COMPONENTS	27F520T		18-RG0478-JHX
R422	268404	RES. WIRE ROUND 0.47 OHM 2W +/	ELECTRICAL COMPONENTS	27V513T		18-RG0478-JHX
R422	268404	RES. WIRE ROUND 0.47 OHM 2W +/	ELECTRICAL COMPONENTS	24F512T		18-RG0478-JHX
R422	268404	RES. WIRE ROUND 0.47 OHM 2W +/	ELECTRICAL COMPONENTS	24V511T		18-RG0478-JHX
R431	266932	RES. FUS. 1 OHM 2W +/-5%	ELECTRICAL COMPONENTS	24V511T		18-EG0109-JHX
R431	266932	RES. FUS. 1 OHM 2W +/-5%	ELECTRICAL COMPONENTS	27V520T	S	18-EG0109-JHX
R431	266932	RES. FUS. 1 OHM 2W +/-5%	ELECTRICAL COMPONENTS	24F512T	S	18-EG0109-JHX
R431	266932	RES. FUS. 1 OHM 2W +/-5%	ELECTRICAL COMPONENTS	27V512T	S	18-EG0109-JHX

Symbol	Stock	Description	Circuit	Model	TypeCode	Drawing
R431	266932	RES. FUS. 1 OHM 2W +/-5%	ELECTRICAL COMPONENTS	27F520T	S	18-EG0109-JHX
R431	266932	RES. FUS. 1 OHM 2W +/-5%	ELECTRICAL COMPONENTS	27F630T	S	18-EG0109-JHX
R431	266932	RES. FUS. 1 OHM 2W +/-5%	ELECTRICAL COMPONENTS	27V513T	S	18-EG0109-JHX
R432	268379	RES. C.F. 5.6K OHM 1/6W +/-5%	ELECTRICAL COMPONENTS	27V520T		18-CB0562-JNX
R432	266372	RES. C.F. 6.8K OHM 1/6W +/-5%	ELECTRICAL COMPONENTS	24F512T		18-CB0682-JNX
R432	268379	RES. C.F. 5.6K OHM 1/6W +/-5%	ELECTRICAL COMPONENTS	27F630T		18-CB0562-JNX
R432	268379	RES. C.F. 5.6K OHM 1/6W +/-5%	ELECTRICAL COMPONENTS	27V512T		18-CB0562-JNX
R432	266372	RES. C.F. 6.8K OHM 1/6W +/-5%	ELECTRICAL COMPONENTS	24V511T		18-CB0682-JNX
R432	268379	RES. C.F. 5.6K OHM 1/6W +/-5%	ELECTRICAL COMPONENTS	27V513T		18-CB0562-JNX
R432	268379	RES. C.F. 5.6K OHM 1/6W +/-5%	ELECTRICAL COMPONENTS	27F520T		18-CB0562-JNX
R433	266932	RES. FUS. 1 OHM 2W +/-5%	ELECTRICAL COMPONENTS	24F512T	S	18-EG0109-JHX
R433	266932	RES. FUS. 1 OHM 2W +/-5%	ELECTRICAL COMPONENTS	24V511T		18-EG0109-JHX
R433	266932	RES. FUS. 1 OHM 2W +/-5%	ELECTRICAL COMPONENTS	27F520T	S	18-EG0109-JHX
R433	266932	RES. FUS. 1 OHM 2W +/-5%	ELECTRICAL COMPONENTS	27F630T	S	18-EG0109-JHX
R433	266932	RES. FUS. 1 OHM 2W +/-5%	ELECTRICAL COMPONENTS	27V513T	S	18-EG0109-JHX
R433	266932	RES. FUS. 1 OHM 2W +/-5%	ELECTRICAL COMPONENTS	27V520T	S	18-EG0109-JHX
R433	266932	RES. FUS. 1 OHM 2W +/-5%	ELECTRICAL COMPONENTS	27V512T	S	18-EG0109-JHX
R453	266255	RES. C.F. 1K OHM 1/6W +/-5%	ELECTRICAL COMPONENTS	27V512T		18-CB0102-JNX
R453	266255	RES. C.F. 1K OHM 1/6W +/-5%	ELECTRICAL COMPONENTS	27F630T		18-CB0102-JNX
R453	266255	RES. C.F. 1K OHM 1/6W +/-5%	ELECTRICAL COMPONENTS	24F512T		18-CB0102-JNX
R453	266255	RES. C.F. 1K OHM 1/6W +/-5%	ELECTRICAL COMPONENTS	24V511T		18-CB0102-JNX
R453	266255	RES. C.F. 1K OHM 1/6W +/-5%	ELECTRICAL COMPONENTS	27V513T		18-CB0102-JNX
R453	266255	RES. C.F. 1K OHM 1/6W +/-5%	ELECTRICAL COMPONENTS	27F520T		18-CB0102-JNX
R453	266255	RES. C.F. 1K OHM 1/6W +/-5%	ELECTRICAL COMPONENTS	27V520T		18-CB0102-JNX
R461	268430	RES. FUS. 1.8 OHM 2W +/-5%	ELECTRICAL COMPONENTS	27V512T	S	18-EG0189-JHX
R461	268405	RES. FUS. 2.2 OHM 2W +/-5%	ELECTRICAL COMPONENTS	27F630T		18-EG0229-JHX
R461	268430	RES. FUS. 1.8 OHM 2W +/-5%	ELECTRICAL COMPONENTS	24V511T		18-EG0189-JHX
R461	268444	RES. FUSE 10 OHM 1/2W +/-5%	ELECTRICAL COMPONENTS	24F512T		18-EE0100-JNX
R461	268430	RES. FUS. 1.8 OHM 2W +/-5%	ELECTRICAL COMPONENTS	27V520T	S	18-EG0189-JHX
R461	268405	RES. FUS. 2.2 OHM 2W +/-5%	ELECTRICAL COMPONENTS	27F520T		18-EG0229-JHX
R461	268430	RES. FUS. 1.8 OHM 2W +/-5%	ELECTRICAL COMPONENTS	27V513T	S	18-EG0189-JHX
R461A	268444	RES. FUSE 10 OHM 1/2W +/-5%	ELECTRICAL COMPONENTS	24F512T		18-EE0100-JNX
R501	268377	RES. C.F. 560 OHM 1/6W +/-5%	ELECTRICAL COMPONENTS	24V511T		18-CB0561-JNX
R501	268377	RES. C.F. 560 OHM 1/6W +/-5%	ELECTRICAL COMPONENTS	27V512T		18-CB0561-JNX
R501	268377	RES. C.F. 560 OHM 1/6W +/-5%	ELECTRICAL COMPONENTS	27V513T		18-CB0561-JNX
R501	268377	RES. C.F. 560 OHM 1/6W +/-5%	ELECTRICAL COMPONENTS	24F512T		18-CB0561-JNX
R501	268377	RES. C.F. 560 OHM 1/6W +/-5%	ELECTRICAL COMPONENTS	27F520T		18-CB0561-JNX
R501	268377	RES. C.F. 560 OHM 1/6W +/-5%	ELECTRICAL COMPONENTS	27V520T		18-CB0561-JNX
R501	268377	RES. C.F. 560 OHM 1/6W +/-5%	ELECTRICAL COMPONENTS	27F630T		18-CB0561-JNX
R502	266272	RES. C.F. 680 OHM 1/6W +/-5%	ELECTRICAL COMPONENTS	24V511T		18-CB0681-JNX
R502	266272	RES. C.F. 680 OHM 1/6W +/-5%	ELECTRICAL COMPONENTS	27V512T		18-CB0681-JNX
R502	266272	RES. C.F. 680 OHM 1/6W +/-5%	ELECTRICAL COMPONENTS	27V520T		18-CB0681-JNX
R502	266272	RES. C.F. 680 OHM 1/6W +/-5%	ELECTRICAL COMPONENTS	27V513T		18-CB0681-JNX
R502	266272	RES. C.F. 680 OHM 1/6W +/-5%	ELECTRICAL COMPONENTS	27F520T		18-CB0681-JNX
R502	266272	RES. C.F. 680 OHM 1/6W +/-5%	ELECTRICAL COMPONENTS	27F630T		18-CB0681-JNX
R502	266272	RES. C.F. 680 OHM 1/6W +/-5%	ELECTRICAL COMPONENTS	24F512T		18-CB0681-JNX
R503	266272	RES. C.F. 680 OHM 1/6W +/-5%	ELECTRICAL COMPONENTS	24V511T		18-CB0681-JNX
R503	266272	RES. C.F. 680 OHM 1/6W +/-5%	ELECTRICAL COMPONENTS	27V520T		18-CB0681-JNX
R503	266272	RES. C.F. 680 OHM 1/6W +/-5%	ELECTRICAL COMPONENTS	27V512T		18-CB0681-JNX
R503	266272	RES. C.F. 680 OHM 1/6W +/-5%	ELECTRICAL COMPONENTS	27F520T		18-CB0681-JNX
R503	266272	RES. C.F. 680 OHM 1/6W +/-5%	ELECTRICAL COMPONENTS	27V513T		18-CB0681-JNX
R503	266272	RES. C.F. 680 OHM 1/6W +/-5%	ELECTRICAL COMPONENTS	24F512T		18-CB0681-JNX
R503	266272	RES. C.F. 680 OHM 1/6W +/-5%	ELECTRICAL COMPONENTS	27F630T		18-CB0681-JNX
R505	268377	RES. C.F. 560 OHM 1/6W +/-5%	ELECTRICAL COMPONENTS	24F512T		18-CB0561-JNX
R505	268377	RES. C.F. 560 OHM 1/6W +/-5%	ELECTRICAL COMPONENTS	27V512T		18-CB0561-JNX
R505	268377	RES. C.F. 560 OHM 1/6W +/-5%	ELECTRICAL COMPONENTS	27F630T		18-CB0561-JNX
R505	268377	RES. C.F. 560 OHM 1/6W +/-5%	ELECTRICAL COMPONENTS	27F520T		18-CB0561-JNX
R505	268377	RES. C.F. 560 OHM 1/6W +/-5%	ELECTRICAL COMPONENTS	27V520T		18-CB0561-JNX
R505	268377	RES. C.F. 560 OHM 1/6W +/-5%	ELECTRICAL COMPONENTS	24V511T		18-CB0561-JNX
R505	268377	RES. C.F. 560 OHM 1/6W +/-5%	ELECTRICAL COMPONENTS	27V513T		18-CB0561-JNX

Symbol	Stock	Description	Circuit	Model	TypeCode	Drawing
R506	266272	RES. C.F. 680 OHM 1/6W +/-5%	ELECTRICAL COMPONENTS	27V520T		18-CB0681-JNX
R506	266272	RES. C.F. 680 OHM 1/6W +/-5%	ELECTRICAL COMPONENTS	24V511T		18-CB0681-JNX
R506	266272	RES. C.F. 680 OHM 1/6W +/-5%	ELECTRICAL COMPONENTS	27V513T		18-CB0681-JNX
R506	266272	RES. C.F. 680 OHM 1/6W +/-5%	ELECTRICAL COMPONENTS	24F512T		18-CB0681-JNX
R506	266272	RES. C.F. 680 OHM 1/6W +/-5%	ELECTRICAL COMPONENTS	27V512T		18-CB0681-JNX
R506	266272	RES. C.F. 680 OHM 1/6W +/-5%	ELECTRICAL COMPONENTS	27F520T		18-CB0681-JNX
R506	266272	RES. C.F. 680 OHM 1/6W +/-5%	ELECTRICAL COMPONENTS	27F630T		18-CB0681-JNX
R508	266272	RES. C.F. 680 OHM 1/6W +/-5%	ELECTRICAL COMPONENTS	24F512T		18-CB0681-JNX
R508	266272	RES. C.F. 680 OHM 1/6W +/-5%	ELECTRICAL COMPONENTS	27F630T		18-CB0681-JNX
R508	266272	RES. C.F. 680 OHM 1/6W +/-5%	ELECTRICAL COMPONENTS	27V512T		18-CB0681-JNX
R508	266272	RES. C.F. 680 OHM 1/6W +/-5%	ELECTRICAL COMPONENTS	27V520T		18-CB0681-JNX
R508	266272	RES. C.F. 680 OHM 1/6W +/-5%	ELECTRICAL COMPONENTS	27F520T		18-CB0681-JNX
R508	266272	RES. C.F. 680 OHM 1/6W +/-5%	ELECTRICAL COMPONENTS	24V511T		18-CB0681-JNX
R508	266272	RES. C.F. 680 OHM 1/6W +/-5%	ELECTRICAL COMPONENTS	27V513T		18-CB0681-JNX
R509	266272	RES. C.F. 680 OHM 1/6W +/-5%	ELECTRICAL COMPONENTS	27F630T		18-CB0681-JNX
R509	266272	RES. C.F. 680 OHM 1/6W +/-5%	ELECTRICAL COMPONENTS	27F520T		18-CB0681-JNX
R509	266272	RES. C.F. 680 OHM 1/6W +/-5%	ELECTRICAL COMPONENTS	27V512T		18-CB0681-JNX
R509	266272	RES. C.F. 680 OHM 1/6W +/-5%	ELECTRICAL COMPONENTS	27V520T		18-CB0681-JNX
R509	266272	RES. C.F. 680 OHM 1/6W +/-5%	ELECTRICAL COMPONENTS	27V513T		18-CB0681-JNX
R509	266272	RES. C.F. 680 OHM 1/6W +/-5%	ELECTRICAL COMPONENTS	24F512T		18-CB0681-JNX
R509	266272	RES. C.F. 680 OHM 1/6W +/-5%	ELECTRICAL COMPONENTS	24V511T		18-CB0681-JNX
R510	268377	RES. C.F. 560 OHM 1/6W +/-5%	ELECTRICAL COMPONENTS	24F512T		18-CB0561-JNX
R510	268377	RES. C.F. 560 OHM 1/6W +/-5%	ELECTRICAL COMPONENTS	27V520T		18-CB0561-JNX
R510	268377	RES. C.F. 560 OHM 1/6W +/-5%	ELECTRICAL COMPONENTS	27V513T		18-CB0561-JNX
R510	268377	RES. C.F. 560 OHM 1/6W +/-5%	ELECTRICAL COMPONENTS	27F520T		18-CB0561-JNX
R510	268377	RES. C.F. 560 OHM 1/6W +/-5%	ELECTRICAL COMPONENTS	27F630T		18-CB0561-JNX
R510	268377	RES. C.F. 560 OHM 1/6W +/-5%	ELECTRICAL COMPONENTS	27V512T		18-CB0561-JNX
R510	268377	RES. C.F. 560 OHM 1/6W +/-5%	ELECTRICAL COMPONENTS	24V511T		18-CB0561-JNX
R511	266272	RES. C.F. 680 OHM 1/6W +/-5%	ELECTRICAL COMPONENTS	27V512T		18-CB0681-JNX
R511	266272	RES. C.F. 680 OHM 1/6W +/-5%	ELECTRICAL COMPONENTS	24F512T		18-CB0681-JNX
R511	266272	RES. C.F. 680 OHM 1/6W +/-5%	ELECTRICAL COMPONENTS	24V511T		18-CB0681-JNX
R511	266272	RES. C.F. 680 OHM 1/6W +/-5%	ELECTRICAL COMPONENTS	27F630T		18-CB0681-JNX
R511	266272	RES. C.F. 680 OHM 1/6W +/-5%	ELECTRICAL COMPONENTS	27V513T		18-CB0681-JNX
R511	266272	RES. C.F. 680 OHM 1/6W +/-5%	ELECTRICAL COMPONENTS	27V520T		18-CB0681-JNX
R511	266272	RES. C.F. 680 OHM 1/6W +/-5%	ELECTRICAL COMPONENTS	27F520T		18-CB0681-JNX
R513	266272	RES. C.F. 680 OHM 1/6W +/-5%	ELECTRICAL COMPONENTS	27V520T		18-CB0681-JNX
R513	266272	RES. C.F. 680 OHM 1/6W +/-5%	ELECTRICAL COMPONENTS	27F630T		18-CB0681-JNX
R513	266272	RES. C.F. 680 OHM 1/6W +/-5%	ELECTRICAL COMPONENTS	24F512T		18-CB0681-JNX
R513	266272	RES. C.F. 680 OHM 1/6W +/-5%	ELECTRICAL COMPONENTS	24V511T		18-CB0681-JNX
R513	266272	RES. C.F. 680 OHM 1/6W +/-5%	ELECTRICAL COMPONENTS	27V512T		18-CB0681-JNX
R513	266272	RES. C.F. 680 OHM 1/6W +/-5%	ELECTRICAL COMPONENTS	27V513T		18-CB0681-JNX
R513	266272	RES. C.F. 680 OHM 1/6W +/-5%	ELECTRICAL COMPONENTS	27F520T		18-CB0681-JNX
R514	266366	RES. C.F. 2.7K OHM 1/6W +/-5%	ELECTRICAL COMPONENTS	27V512T		18-CB0272-JNX
R514	266366	RES. C.F. 2.7K OHM 1/6W +/-5%	ELECTRICAL COMPONENTS	24F512T		18-CB0272-JNX
R514	266366	RES. C.F. 2.7K OHM 1/6W +/-5%	ELECTRICAL COMPONENTS	27F630T		18-CB0272-JNX
R514	266366	RES. C.F. 2.7K OHM 1/6W +/-5%	ELECTRICAL COMPONENTS	27V513T		18-CB0272-JNX
R514	266366	RES. C.F. 2.7K OHM 1/6W +/-5%	ELECTRICAL COMPONENTS	27F520T		18-CB0272-JNX
R514	266366	RES. C.F. 2.7K OHM 1/6W +/-5%	ELECTRICAL COMPONENTS	24V511T		18-CB0272-JNX
R514	266366	RES. C.F. 2.7K OHM 1/6W +/-5%	ELECTRICAL COMPONENTS	27V520T		18-CB0272-JNX
R515	266255	RES. C.F. 1K OHM 1/6W +/-5%	ELECTRICAL COMPONENTS	27F630T		18-CB0102-JNX
R515	266255	RES. C.F. 1K OHM 1/6W +/-5%	ELECTRICAL COMPONENTS	27V520T		18-CB0102-JNX
R515	266255	RES. C.F. 1K OHM 1/6W +/-5%	ELECTRICAL COMPONENTS	24F512T		18-CB0102-JNX
R515	266255	RES. C.F. 1K OHM 1/6W +/-5%	ELECTRICAL COMPONENTS	27V512T		18-CB0102-JNX
R515	266255	RES. C.F. 1K OHM 1/6W +/-5%	ELECTRICAL COMPONENTS	27F520T		18-CB0102-JNX
R515	266255	RES. C.F. 1K OHM 1/6W +/-5%	ELECTRICAL COMPONENTS	24V511T		18-CB0102-JNX
R515	266255	RES. C.F. 1K OHM 1/6W +/-5%	ELECTRICAL COMPONENTS	27V513T		18-CB0102-JNX
R516	266282	RES. M.O. 18K OHM 2W +/-5%	ELECTRICAL COMPONENTS	24V511T		18-FG0183-JHX
R516	266282	RES. M.O. 18K OHM 2W +/-5%	ELECTRICAL COMPONENTS	24F512T		18-FG0183-JHX
R516	266282	RES. M.O. 18K OHM 2W +/-5%	ELECTRICAL COMPONENTS	27V512T		18-FG0183-JHX
R516	266282	RES. M.O. 18K OHM 2W +/-5%	ELECTRICAL COMPONENTS	27V513T		18-FG0183-JHX

Symbol	Stock	Description	Circuit	Model	TypeCode	Drawing
R516	266282	RES. M.O. 18K OHM 2W +/-5%	ELECTRICAL COMPONENTS	27V520T		18-FG0183-JHX
R516	266282	RES. M.O. 18K OHM 2W +/-5%	ELECTRICAL COMPONENTS	27F630T		18-FG0183-JHX
R516	266282	RES. M.O. 18K OHM 2W +/-5%	ELECTRICAL COMPONENTS	27F520T		18-FG0183-JHX
R517	266282	RES. M.O. 18K OHM 2W +/-5%	ELECTRICAL COMPONENTS	27V520T		18-FG0183-JHX
R517	266282	RES. M.O. 18K OHM 2W +/-5%	ELECTRICAL COMPONENTS	24F512T		18-FG0183-JHX
R517	266282	RES. M.O. 18K OHM 2W +/-5%	ELECTRICAL COMPONENTS	27F630T		18-FG0183-JHX
R517	266282	RES. M.O. 18K OHM 2W +/-5%	ELECTRICAL COMPONENTS	27V513T		18-FG0183-JHX
R517	266282	RES. M.O. 18K OHM 2W +/-5%	ELECTRICAL COMPONENTS	27V512T		18-FG0183-JHX
R517	266282	RES. M.O. 18K OHM 2W +/-5%	ELECTRICAL COMPONENTS	24V511T		18-FG0183-JHX
R517	266282	RES. M.O. 18K OHM 2W +/-5%	ELECTRICAL COMPONENTS	27F520T		18-FG0183-JHX
R518	266282	RES. M.O. 18K OHM 2W +/-5%	ELECTRICAL COMPONENTS	27F520T		18-FG0183-JHX
R518	266282	RES. M.O. 18K OHM 2W +/-5%	ELECTRICAL COMPONENTS	27V513T		18-FG0183-JHX
R518	266282	RES. M.O. 18K OHM 2W +/-5%	ELECTRICAL COMPONENTS	27V512T		18-FG0183-JHX
R518	266282	RES. M.O. 18K OHM 2W +/-5%	ELECTRICAL COMPONENTS	24V511T		18-FG0183-JHX
R518	266282	RES. M.O. 18K OHM 2W +/-5%	ELECTRICAL COMPONENTS	24F512T		18-FG0183-JHX
R518	266282	RES. M.O. 18K OHM 2W +/-5%	ELECTRICAL COMPONENTS	27V520T		18-FG0183-JHX
R518	266282	RES. M.O. 18K OHM 2W +/-5%	ELECTRICAL COMPONENTS	27F630T		18-FG0183-JHX
R519	268406	RES. M.O. 2.7K OHM 1/2W +/-5%	ELECTRICAL COMPONENTS	27V520T		18-FE0272-JNX
R519	268406	RES. M.O. 2.7K OHM 1/2W +/-5%	ELECTRICAL COMPONENTS	27F630T		18-FE0272-JNX
R519	268406	RES. M.O. 2.7K OHM 1/2W +/-5%	ELECTRICAL COMPONENTS	24F512T		18-FE0272-JNX
R519	268406	RES. M.O. 2.7K OHM 1/2W +/-5%	ELECTRICAL COMPONENTS	27V513T		18-FE0272-JNX
R519	268406	RES. M.O. 2.7K OHM 1/2W +/-5%	ELECTRICAL COMPONENTS	24V511T		18-FE0272-JNX
R519	268406	RES. M.O. 2.7K OHM 1/2W +/-5%	ELECTRICAL COMPONENTS	27F520T		18-FE0272-JNX
R519	268406	RES. M.O. 2.7K OHM 1/2W +/-5%	ELECTRICAL COMPONENTS	27V512T		18-FE0272-JNX
R520	268406	RES. M.O. 2.7K OHM 1/2W +/-5%	ELECTRICAL COMPONENTS	27V520T		18-FE0272-JNX
R520	268406	RES. M.O. 2.7K OHM 1/2W +/-5%	ELECTRICAL COMPONENTS	24F512T		18-FE0272-JNX
R520	268406	RES. M.O. 2.7K OHM 1/2W +/-5%	ELECTRICAL COMPONENTS	27F630T		18-FE0272-JNX
R520	268406	RES. M.O. 2.7K OHM 1/2W +/-5%	ELECTRICAL COMPONENTS	27V513T		18-FE0272-JNX
R520	268406	RES. M.O. 2.7K OHM 1/2W +/-5%	ELECTRICAL COMPONENTS	27F520T		18-FE0272-JNX
R520	268406	RES. M.O. 2.7K OHM 1/2W +/-5%	ELECTRICAL COMPONENTS	24V511T		18-FE0272-JNX
R520	268406	RES. M.O. 2.7K OHM 1/2W +/-5%	ELECTRICAL COMPONENTS	27V512T		18-FE0272-JNX
R521	268406	RES. M.O. 2.7K OHM 1/2W +/-5%	ELECTRICAL COMPONENTS	27F520T		18-FE0272-JNX
R521	268406	RES. M.O. 2.7K OHM 1/2W +/-5%	ELECTRICAL COMPONENTS	27V513T		18-FE0272-JNX
R521	268406	RES. M.O. 2.7K OHM 1/2W +/-5%	ELECTRICAL COMPONENTS	24F512T		18-FE0272-JNX
R521	268406	RES. M.O. 2.7K OHM 1/2W +/-5%	ELECTRICAL COMPONENTS	27F630T		18-FE0272-JNX
R521	268406	RES. M.O. 2.7K OHM 1/2W +/-5%	ELECTRICAL COMPONENTS	27V512T		18-FE0272-JNX
R521	268406	RES. M.O. 2.7K OHM 1/2W +/-5%	ELECTRICAL COMPONENTS	27V520T		18-FE0272-JNX
R521	268406	RES. M.O. 2.7K OHM 1/2W +/-5%	ELECTRICAL COMPONENTS	24V511T		18-FE0272-JNX
R522	266272	RES. C.F. 680 OHM 1/6W +/-5%	ELECTRICAL COMPONENTS	24F512T		18-CB0681-JNX
R522	266272	RES. C.F. 680 OHM 1/6W +/-5%	ELECTRICAL COMPONENTS	27F520T		18-CB0681-JNX
R522	266272	RES. C.F. 680 OHM 1/6W +/-5%	ELECTRICAL COMPONENTS	27V512T		18-CB0681-JNX
R522	266272	RES. C.F. 680 OHM 1/6W +/-5%	ELECTRICAL COMPONENTS	24V511T		18-CB0681-JNX
R522	266272	RES. C.F. 680 OHM 1/6W +/-5%	ELECTRICAL COMPONENTS	27F630T		18-CB0681-JNX
R522	266272	RES. C.F. 680 OHM 1/6W +/-5%	ELECTRICAL COMPONENTS	27V513T		18-CB0681-JNX
R522	266272	RES. C.F. 680 OHM 1/6W +/-5%	ELECTRICAL COMPONENTS	27V520T		18-CB0681-JNX
R605	266364	RES. C.F. 47K OHM 1/6W +/-5%	ELECTRICAL COMPONENTS	27V512T		18-CB0473-JNX
R605	266364	RES. C.F. 47K OHM 1/6W +/-5%	ELECTRICAL COMPONENTS	27F630T		18-CB0473-JNX
R605	266364	RES. C.F. 47K OHM 1/6W +/-5%	ELECTRICAL COMPONENTS	27V520T		18-CB0473-JNX
R605	266364	RES. C.F. 47K OHM 1/6W +/-5%	ELECTRICAL COMPONENTS	24F512T		18-CB0473-JNX
R605	266364	RES. C.F. 47K OHM 1/6W +/-5%	ELECTRICAL COMPONENTS	24V511T		18-CB0473-JNX
R605	266364	RES. C.F. 47K OHM 1/6W +/-5%	ELECTRICAL COMPONENTS	27F520T		18-CB0473-JNX
R605	266364	RES. C.F. 47K OHM 1/6W +/-5%	ELECTRICAL COMPONENTS	27V513T		18-CB0473-JNX
R605A	266369	RES. C.F. 820 OHM 1/6W +/-5%	ELECTRICAL COMPONENTS	27V520T		18-CB0821-JNX
R605A	266369	RES. C.F. 820 OHM 1/6W +/-5%	ELECTRICAL COMPONENTS	24V511T		18-CB0821-JNX
R605A	266369	RES. C.F. 820 OHM 1/6W +/-5%	ELECTRICAL COMPONENTS	27F520T		18-CB0821-JNX
R605A	266369	RES. C.F. 820 OHM 1/6W +/-5%	ELECTRICAL COMPONENTS	27V513T		18-CB0821-JNX
R605A	266369	RES. C.F. 820 OHM 1/6W +/-5%	ELECTRICAL COMPONENTS	24F512T		18-CB0821-JNX
R605A	266369	RES. C.F. 820 OHM 1/6W +/-5%	ELECTRICAL COMPONENTS	27V512T		18-CB0821-JNX
R605A	266369	RES. C.F. 820 OHM 1/6W +/-5%	ELECTRICAL COMPONENTS	27F630T		18-CB0821-JNX
R606	266322	RES. C.F. 10K OHM 1/6W +/-5%	ELECTRICAL COMPONENTS	27V513T		18-CB0103-JNX

Symbol	Stock	Description	Circuit	Model	TypeCode	Drawing
R606	266322	RES. C.F. 10K OHM 1/6W +/-5%	ELECTRICAL COMPONENTS	27V520T		18-CB0103-JNX
R606	266322	RES. C.F. 10K OHM 1/6W +/-5%	ELECTRICAL COMPONENTS	27V512T		18-CB0103-JNX
R606	266322	RES. C.F. 10K OHM 1/6W +/-5%	ELECTRICAL COMPONENTS	24F512T		18-CB0103-JNX
R606	266322	RES. C.F. 10K OHM 1/6W +/-5%	ELECTRICAL COMPONENTS	24V511T		18-CB0103-JNX
R606	266322	RES. C.F. 10K OHM 1/6W +/-5%	ELECTRICAL COMPONENTS	27F520T		18-CB0103-JNX
R606	266322	RES. C.F. 10K OHM 1/6W +/-5%	ELECTRICAL COMPONENTS	27F630T		18-CB0103-JNX
R608	266255	RES. C.F. 1K OHM 1/6W +/-5%	ELECTRICAL COMPONENTS	27V513T		18-CB0102-JNX
R608	266255	RES. C.F. 1K OHM 1/6W +/-5%	ELECTRICAL COMPONENTS	27V512T		18-CB0102-JNX
R608	266255	RES. C.F. 1K OHM 1/6W +/-5%	ELECTRICAL COMPONENTS	24F512T		18-CB0102-JNX
R608	266255	RES. C.F. 1K OHM 1/6W +/-5%	ELECTRICAL COMPONENTS	27V520T		18-CB0102-JNX
R608	266255	RES. C.F. 1K OHM 1/6W +/-5%	ELECTRICAL COMPONENTS	27F630T		18-CB0102-JNX
R608	266255	RES. C.F. 1K OHM 1/6W +/-5%	ELECTRICAL COMPONENTS	24V511T		18-CB0102-JNX
R608	266255	RES. C.F. 1K OHM 1/6W +/-5%	ELECTRICAL COMPONENTS	27F520T		18-CB0102-JNX
R610	266364	RES. C.F. 47K OHM 1/6W +/-5%	ELECTRICAL COMPONENTS	24V511T		18-CB0473-JNX
R610	266364	RES. C.F. 47K OHM 1/6W +/-5%	ELECTRICAL COMPONENTS	27V512T		18-CB0473-JNX
R610	266364	RES. C.F. 47K OHM 1/6W +/-5%	ELECTRICAL COMPONENTS	24F512T		18-CB0473-JNX
R610	266364	RES. C.F. 47K OHM 1/6W +/-5%	ELECTRICAL COMPONENTS	27V513T		18-CB0473-JNX
R610	266364	RES. C.F. 47K OHM 1/6W +/-5%	ELECTRICAL COMPONENTS	27V520T		18-CB0473-JNX
R610	266364	RES. C.F. 47K OHM 1/6W +/-5%	ELECTRICAL COMPONENTS	27F630T		18-CB0473-JNX
R610	266364	RES. C.F. 47K OHM 1/6W +/-5%	ELECTRICAL COMPONENTS	27F520T		18-CB0473-JNX
R611	268404	RES. WIRE ROUND 0.47 OHM 2W +/	ELECTRICAL COMPONENTS	27V513T		18-RG0478-JHX
R611	268404	RES. WIRE ROUND 0.47 OHM 2W +/	ELECTRICAL COMPONENTS	27V520T		18-RG0478-JHX
R611	268404	RES. WIRE ROUND 0.47 OHM 2W +/	ELECTRICAL COMPONENTS	27F630T		18-RG0478-JHX
R611	268404	RES. WIRE ROUND 0.47 OHM 2W +/	ELECTRICAL COMPONENTS	27F520T		18-RG0478-JHX
R611	268404	RES. WIRE ROUND 0.47 OHM 2W +/	ELECTRICAL COMPONENTS	24F512T		18-RG0478-JHX
R611	268404	RES. WIRE ROUND 0.47 OHM 2W +/	ELECTRICAL COMPONENTS	27V512T		18-RG0478-JHX
R611	268404	RES. WIRE ROUND 0.47 OHM 2W +/	ELECTRICAL COMPONENTS	24V511T		18-RG0478-JHX
R612	266255	RES. C.F. 1K OHM 1/6W +/-5%	ELECTRICAL COMPONENTS	24F512T		18-CB0102-JNX
R612	266255	RES. C.F. 1K OHM 1/6W +/-5%	ELECTRICAL COMPONENTS	27V512T		18-CB0102-JNX
R612	266255	RES. C.F. 1K OHM 1/6W +/-5%	ELECTRICAL COMPONENTS	27V513T		18-CB0102-JNX
R612	266255	RES. C.F. 1K OHM 1/6W +/-5%	ELECTRICAL COMPONENTS	27F630T		18-CB0102-JNX
R612	266255	RES. C.F. 1K OHM 1/6W +/-5%	ELECTRICAL COMPONENTS	27F520T		18-CB0102-JNX
R612	266255	RES. C.F. 1K OHM 1/6W +/-5%	ELECTRICAL COMPONENTS	24V511T		18-CB0102-JNX
R612	266255	RES. C.F. 1K OHM 1/6W +/-5%	ELECTRICAL COMPONENTS	27V520T		18-CB0102-JNX
R618	266322	RES. C.F. 10K OHM 1/6W +/-5%	ELECTRICAL COMPONENTS	24F512T		18-CB0103-JNX
R618	266322	RES. C.F. 10K OHM 1/6W +/-5%	ELECTRICAL COMPONENTS	27V512T		18-CB0103-JNX
R618	266322	RES. C.F. 10K OHM 1/6W +/-5%	ELECTRICAL COMPONENTS	24V511T		18-CB0103-JNX
R618	266322	RES. C.F. 10K OHM 1/6W +/-5%	ELECTRICAL COMPONENTS	27F520T		18-CB0103-JNX
R618	266322	RES. C.F. 10K OHM 1/6W +/-5%	ELECTRICAL COMPONENTS	27V513T		18-CB0103-JNX
R618	266322	RES. C.F. 10K OHM 1/6W +/-5%	ELECTRICAL COMPONENTS	27V520T		18-CB0103-JNX
R618	266322	RES. C.F. 10K OHM 1/6W +/-5%	ELECTRICAL COMPONENTS	27F630T		18-CB0103-JNX
R656	266322	RES. C.F. 10K OHM 1/6W +/-5%	ELECTRICAL COMPONENTS	24F512T		18-CB0103-JNX
R656	266322	RES. C.F. 10K OHM 1/6W +/-5%	ELECTRICAL COMPONENTS	27V520T		18-CB0103-JNX
R656	266322	RES. C.F. 10K OHM 1/6W +/-5%	ELECTRICAL COMPONENTS	27V512T		18-CB0103-JNX
R656	266322	RES. C.F. 10K OHM 1/6W +/-5%	ELECTRICAL COMPONENTS	27F630T		18-CB0103-JNX
R656	266322	RES. C.F. 10K OHM 1/6W +/-5%	ELECTRICAL COMPONENTS	27F520T		18-CB0103-JNX
R656	266322	RES. C.F. 10K OHM 1/6W +/-5%	ELECTRICAL COMPONENTS	27V513T		18-CB0103-JNX
R656	266322	RES. C.F. 10K OHM 1/6W +/-5%	ELECTRICAL COMPONENTS	24V511T		18-CB0103-JNX
R801	266940	RES. H.VOLT. CC 1M OHM 1/2W +/	ELECTRICAL COMPONENTS	24V511T		18-KE0105-JN3
R801	266940	RES. H.VOLT. CC 1M OHM 1/2W +/	ELECTRICAL COMPONENTS	27V512T	S	18-KE0105-JN3
R801	266940	RES. H.VOLT. CC 1M OHM 1/2W +/	ELECTRICAL COMPONENTS	27F630T	S	18-KE0105-JN3
R801	266940	RES. H.VOLT. CC 1M OHM 1/2W +/	ELECTRICAL COMPONENTS	27V520T	S	18-KE0105-JN3
R801	266940	RES. H.VOLT. CC 1M OHM 1/2W +/	ELECTRICAL COMPONENTS	27V513T	S	18-KE0105-JN3
R801	266940	RES. H.VOLT. CC 1M OHM 1/2W +/	ELECTRICAL COMPONENTS	27F520T	S	18-KE0105-JN3
R801	266940	RES. H.VOLT. CC 1M OHM 1/2W +/	ELECTRICAL COMPONENTS	24F512T	S	18-KE0105-JN3
R810	268407	RES. M.O. 68K OHM 2W +/-5%	ELECTRICAL COMPONENTS	24V511T		18-FG0683-JHX
R810	268407	RES. M.O. 68K OHM 2W +/-5%	ELECTRICAL COMPONENTS	24F512T		18-FG0683-JHX
R810	268407	RES. M.O. 68K OHM 2W +/-5%	ELECTRICAL COMPONENTS	27V512T		18-FG0683-JHX
R810	268407	RES. M.O. 68K OHM 2W +/-5%	ELECTRICAL COMPONENTS	27V520T		18-FG0683-JHX
R810	268407	RES. M.O. 68K OHM 2W +/-5%	ELECTRICAL COMPONENTS	27F630T		18-FG0683-JHX

Symbol	Stock	Description	Circuit	Model	TypeCode	Drawing
R810	268407	RES. M.O. 68K OHM 2W +/-5%	ELECTRICAL COMPONENTS	27V513T		18-FG0683-JHX
R810	268407	RES. M.O. 68K OHM 2W +/-5%	ELECTRICAL COMPONENTS	27F520T		18-FG0683-JHX
R811	266255	RES. C.F. 1K OHM 1/6W +/-5%	ELECTRICAL COMPONENTS	24V511T		18-CB0102-JNX
R811	266255	RES. C.F. 1K OHM 1/6W +/-5%	ELECTRICAL COMPONENTS	24F512T		18-CB0102-JNX
R811	266255	RES. C.F. 1K OHM 1/6W +/-5%	ELECTRICAL COMPONENTS	27V512T		18-CB0102-JNX
R811	266255	RES. C.F. 1K OHM 1/6W +/-5%	ELECTRICAL COMPONENTS	27V520T		18-CB0102-JNX
R811	266255	RES. C.F. 1K OHM 1/6W +/-5%	ELECTRICAL COMPONENTS	27F520T		18-CB0102-JNX
R811	266255	RES. C.F. 1K OHM 1/6W +/-5%	ELECTRICAL COMPONENTS	27F630T		18-CB0102-JNX
R811	266255	RES. C.F. 1K OHM 1/6W +/-5%	ELECTRICAL COMPONENTS	27V513T		18-CB0102-JNX
R812	266255	RES. C.F. 1K OHM 1/6W +/-5%	ELECTRICAL COMPONENTS	27V513T		18-CB0102-JNX
R812	266255	RES. C.F. 1K OHM 1/6W +/-5%	ELECTRICAL COMPONENTS	24F512T		18-CB0102-JNX
R812	266255	RES. C.F. 1K OHM 1/6W +/-5%	ELECTRICAL COMPONENTS	27F520T		18-CB0102-JNX
R812	266255	RES. C.F. 1K OHM 1/6W +/-5%	ELECTRICAL COMPONENTS	27V512T		18-CB0102-JNX
R812	266255	RES. C.F. 1K OHM 1/6W +/-5%	ELECTRICAL COMPONENTS	27V520T		18-CB0102-JNX
R812	266255	RES. C.F. 1K OHM 1/6W +/-5%	ELECTRICAL COMPONENTS	24V511T		18-CB0102-JNX
R812	266255	RES. C.F. 1K OHM 1/6W +/-5%	ELECTRICAL COMPONENTS	27F630T		18-CB0102-JNX
R813	268373	RES. C.F. 4.7 OHM 1/4W +/-5%	ELECTRICAL COMPONENTS	24F512T		18-CD0479-JNX
R813	268373	RES. C.F. 4.7 OHM 1/4W +/-5%	ELECTRICAL COMPONENTS	27V520T		18-CD0479-JNX
R813	268373	RES. C.F. 4.7 OHM 1/4W +/-5%	ELECTRICAL COMPONENTS	27F520T		18-CD0479-JNX
R813	268373	RES. C.F. 4.7 OHM 1/4W +/-5%	ELECTRICAL COMPONENTS	24V511T		18-CD0479-JNX
R813	268373	RES. C.F. 4.7 OHM 1/4W +/-5%	ELECTRICAL COMPONENTS	27F630T		18-CD0479-JNX
R813	268373	RES. C.F. 4.7 OHM 1/4W +/-5%	ELECTRICAL COMPONENTS	27V513T		18-CD0479-JNX
R813	268373	RES. C.F. 4.7 OHM 1/4W +/-5%	ELECTRICAL COMPONENTS	27V512T		18-CD0479-JNX
R814	268408	RES. C.F. 1.5K OHM 1/4W +/-5%	ELECTRICAL COMPONENTS	24F512T		18-CD0152-JNX
R814	268408	RES. C.F. 1.5K OHM 1/4W +/-5%	ELECTRICAL COMPONENTS	27F630T		18-CD0152-JNX
R814	268408	RES. C.F. 1.5K OHM 1/4W +/-5%	ELECTRICAL COMPONENTS	27V513T		18-CD0152-JNX
R814	268408	RES. C.F. 1.5K OHM 1/4W +/-5%	ELECTRICAL COMPONENTS	24V511T		18-CD0152-JNX
R814	268408	RES. C.F. 1.5K OHM 1/4W +/-5%	ELECTRICAL COMPONENTS	27V520T		18-CD0152-JNX
R814	268408	RES. C.F. 1.5K OHM 1/4W +/-5%	ELECTRICAL COMPONENTS	27F520T		18-CD0152-JNX
R814	268408	RES. C.F. 1.5K OHM 1/4W +/-5%	ELECTRICAL COMPONENTS	27V512T		18-CD0152-JNX
R815	266253	RES. C.F. 100 OHM 1/6W +/-5%	ELECTRICAL COMPONENTS	27V520T		18-CB0101-JNX
R815	266253	RES. C.F. 100 OHM 1/6W +/-5%	ELECTRICAL COMPONENTS	24F512T		18-CB0101-JNX
R815	266253	RES. C.F. 100 OHM 1/6W +/-5%	ELECTRICAL COMPONENTS	27V513T		18-CB0101-JNX
R815	266253	RES. C.F. 100 OHM 1/6W +/-5%	ELECTRICAL COMPONENTS	24V511T		18-CB0101-JNX
R815	266253	RES. C.F. 100 OHM 1/6W +/-5%	ELECTRICAL COMPONENTS	27F520T		18-CB0101-JNX
R815	266253	RES. C.F. 100 OHM 1/6W +/-5%	ELECTRICAL COMPONENTS	27F630T		18-CB0101-JNX
R815	266253	RES. C.F. 100 OHM 1/6W +/-5%	ELECTRICAL COMPONENTS	27V512T		18-CB0101-JNX
R816	268409	RES. WIRE ROUND 0.12 OHM 2W +/	ELECTRICAL COMPONENTS	27V520T		18-RG0128-JHX
R816	268409	RES. WIRE ROUND 0.12 OHM 2W +/	ELECTRICAL COMPONENTS	24V511T		18-RG0128-JHX
R816	268409	RES. WIRE ROUND 0.12 OHM 2W +/	ELECTRICAL COMPONENTS	27F520T		18-RG0128-JHX
R816	268409	RES. WIRE ROUND 0.12 OHM 2W +/	ELECTRICAL COMPONENTS	27F630T		18-RG0128-JHX
R816	268409	RES. WIRE ROUND 0.12 OHM 2W +/	ELECTRICAL COMPONENTS	24F512T		18-RG0128-JHX
R816	268409	RES. WIRE ROUND 0.12 OHM 2W +/	ELECTRICAL COMPONENTS	27V513T		18-RG0128-JHX
R816	268409	RES. WIRE ROUND 0.12 OHM 2W +/	ELECTRICAL COMPONENTS	27V512T		18-RG0128-JHX
R820	268410	FUSE 5A 250VAC	ELECTRICAL COMPONENTS	27V520T		50-05000D-NUU
R820	268410	FUSE 5A 250VAC	ELECTRICAL COMPONENTS	27V512T		50-05000D-NUU
R820	268410	FUSE 5A 250VAC	ELECTRICAL COMPONENTS	24V511T		50-05000D-NUU
R820	268410	FUSE 5A 250VAC	ELECTRICAL COMPONENTS	27F630T		50-05000D-NUU
R820	268410	FUSE 5A 250VAC	ELECTRICAL COMPONENTS	27F520T		50-05000D-NUU
R820	268410	FUSE 5A 250VAC	ELECTRICAL COMPONENTS	24F512T		50-05000D-NUU
R820	268410	FUSE 5A 250VAC	ELECTRICAL COMPONENTS	27V513T		50-05000D-NUU
R821	268411	FUSE 3A 250VAC	ELECTRICAL COMPONENTS	27F630T		50-03000D-NUU
R821	268411	FUSE 3A 250VAC	ELECTRICAL COMPONENTS	27F520T		50-03000D-NUU
R821	268411	FUSE 3A 250VAC	ELECTRICAL COMPONENTS	27V512T		50-03000D-NUU
R821	268411	FUSE 3A 250VAC	ELECTRICAL COMPONENTS	27V513T		50-03000D-NUU
R821	268411	FUSE 3A 250VAC	ELECTRICAL COMPONENTS	27V520T		50-03000D-NUU
R821	268411	FUSE 3A 250VAC	ELECTRICAL COMPONENTS	24V511T		50-03000D-NUU
R821	268411	FUSE 3A 250VAC	ELECTRICAL COMPONENTS	24F512T		50-03000D-NUU
R823	268411	FUSE 3A 250VAC	ELECTRICAL COMPONENTS	27V520T		50-03000D-NUU
R823	268411	FUSE 3A 250VAC	ELECTRICAL COMPONENTS	24F512T		50-03000D-NUU

Symbol	Stock	Description	Circuit	Model	TypeCode	Drawing
R823	268411	FUSE 3A 250VAC	ELECTRICAL COMPONENTS	24V511T		50-03000D-NUU
R823	268411	FUSE 3A 250VAC	ELECTRICAL COMPONENTS	27V512T		50-03000D-NUU
R823	268411	FUSE 3A 250VAC	ELECTRICAL COMPONENTS	27F520T		50-03000D-NUU
R823	268411	FUSE 3A 250VAC	ELECTRICAL COMPONENTS	27V513T		50-03000D-NUU
R823	268411	FUSE 3A 250VAC	ELECTRICAL COMPONENTS	27F630T		50-03000D-NUU
R826	268412	RES. M.O. 10 OHM 2W +/-5%	ELECTRICAL COMPONENTS	27V520T		18-FG0100-JHX
R826	268412	RES. M.O. 10 OHM 2W +/-5%	ELECTRICAL COMPONENTS	27F630T		18-FG0100-JHX
R826	268412	RES. M.O. 10 OHM 2W +/-5%	ELECTRICAL COMPONENTS	27F520T		18-FG0100-JHX
R826	268412	RES. M.O. 10 OHM 2W +/-5%	ELECTRICAL COMPONENTS	24V511T		18-FG0100-JHX
R826	268412	RES. M.O. 10 OHM 2W +/-5%	ELECTRICAL COMPONENTS	27V513T		18-FG0100-JHX
R826	268412	RES. M.O. 10 OHM 2W +/-5%	ELECTRICAL COMPONENTS	27V512T		18-FG0100-JHX
R826	268412	RES. M.O. 10 OHM 2W +/-5%	ELECTRICAL COMPONENTS	24F512T		18-FG0100-JHX
R827	268413	RES. CEMENT 4.7K OHM 5W +/-5%	ELECTRICAL COMPONENTS	27V512T		18-GJ0472-JTX1
R827	268413	RES. CEMENT 4.7K OHM 5W +/-5%	ELECTRICAL COMPONENTS	27V520T		18-GJ0472-JTX1
R827	268413	RES. CEMENT 4.7K OHM 5W +/-5%	ELECTRICAL COMPONENTS	27F630T		18-GJ0472-JTX1
R827	268413	RES. CEMENT 4.7K OHM 5W +/-5%	ELECTRICAL COMPONENTS	27F520T		18-GJ0472-JTX1
R827	268413	RES. CEMENT 4.7K OHM 5W +/-5%	ELECTRICAL COMPONENTS	24V511T		18-GJ0472-JTX1
R827	268413	RES. CEMENT 4.7K OHM 5W +/-5%	ELECTRICAL COMPONENTS	24F512T		18-GJ0472-JTX1
R827	268413	RES. CEMENT 4.7K OHM 5W +/-5%	ELECTRICAL COMPONENTS	27V513T		18-GJ0472-JTX1
R828	268380	RES. M.O. 22K OHM 2W +/-5%	ELECTRICAL COMPONENTS	27V520T		18-FG0223-JHX
R828	268380	RES. M.O. 22K OHM 2W +/-5%	ELECTRICAL COMPONENTS	27F520T		18-FG0223-JHX
R828	268380	RES. M.O. 22K OHM 2W +/-5%	ELECTRICAL COMPONENTS	27V513T		18-FG0223-JHX
R828	268380	RES. M.O. 22K OHM 2W +/-5%	ELECTRICAL COMPONENTS	27F630T		18-FG0223-JHX
R828	268380	RES. M.O. 22K OHM 2W +/-5%	ELECTRICAL COMPONENTS	27V512T		18-FG0223-JHX
R828	268380	RES. M.O. 22K OHM 2W +/-5%	ELECTRICAL COMPONENTS	24V511T		18-FG0223-JHX
R828	268380	RES. M.O. 22K OHM 2W +/-5%	ELECTRICAL COMPONENTS	24F512T		18-FG0223-JHX
R829	266322	RES. C.F. 10K OHM 1/6W +/-5%	ELECTRICAL COMPONENTS	24F512T		18-CB0103-JNX
R829	266322	RES. C.F. 10K OHM 1/6W +/-5%	ELECTRICAL COMPONENTS	27V520T		18-CB0103-JNX
R829	266322	RES. C.F. 10K OHM 1/6W +/-5%	ELECTRICAL COMPONENTS	24V511T		18-CB0103-JNX
R829	266322	RES. C.F. 10K OHM 1/6W +/-5%	ELECTRICAL COMPONENTS	27F520T		18-CB0103-JNX
R829	266322	RES. C.F. 10K OHM 1/6W +/-5%	ELECTRICAL COMPONENTS	27V512T		18-CB0103-JNX
R829	266322	RES. C.F. 10K OHM 1/6W +/-5%	ELECTRICAL COMPONENTS	27V513T		18-CB0103-JNX
R829	266322	RES. C.F. 10K OHM 1/6W +/-5%	ELECTRICAL COMPONENTS	27F630T		18-CB0103-JNX
R830	266255	RES. C.F. 1K OHM 1/6W +/-5%	ELECTRICAL COMPONENTS	27F630T		18-CB0102-JNX
R830	266255	RES. C.F. 1K OHM 1/6W +/-5%	ELECTRICAL COMPONENTS	27V520T		18-CB0102-JNX
R830	266255	RES. C.F. 1K OHM 1/6W +/-5%	ELECTRICAL COMPONENTS	27V513T		18-CB0102-JNX
R830	266255	RES. C.F. 1K OHM 1/6W +/-5%	ELECTRICAL COMPONENTS	24V511T		18-CB0102-JNX
R830	266255	RES. C.F. 1K OHM 1/6W +/-5%	ELECTRICAL COMPONENTS	27F520T		18-CB0102-JNX
R830	266255	RES. C.F. 1K OHM 1/6W +/-5%	ELECTRICAL COMPONENTS	24F512T		18-CB0102-JNX
R830	266255	RES. C.F. 1K OHM 1/6W +/-5%	ELECTRICAL COMPONENTS	27V512T		18-CB0102-JNX
R831	266378	RES. C.F. 33K OHM 1/6W +/-5%	ELECTRICAL COMPONENTS	27F630T		18-CB0333-JNX
R831	266378	RES. C.F. 33K OHM 1/6W +/-5%	ELECTRICAL COMPONENTS	27V520T		18-CB0333-JNX
R831	266378	RES. C.F. 33K OHM 1/6W +/-5%	ELECTRICAL COMPONENTS	24V511T		18-CB0333-JNX
R831	266378	RES. C.F. 33K OHM 1/6W +/-5%	ELECTRICAL COMPONENTS	27F520T		18-CB0333-JNX
R831	266378	RES. C.F. 33K OHM 1/6W +/-5%	ELECTRICAL COMPONENTS	27V512T		18-CB0333-JNX
R831	266378	RES. C.F. 33K OHM 1/6W +/-5%	ELECTRICAL COMPONENTS	27V513T		18-CB0333-JNX
R831	266378	RES. C.F. 33K OHM 1/6W +/-5%	ELECTRICAL COMPONENTS	24F512T		18-CB0333-JNX
R832	266322	RES. C.F. 10K OHM 1/6W +/-5%	ELECTRICAL COMPONENTS	27V513T		18-CB0103-JNX
R832	266322	RES. C.F. 10K OHM 1/6W +/-5%	ELECTRICAL COMPONENTS	27F520T		18-CB0103-JNX
R832	266322	RES. C.F. 10K OHM 1/6W +/-5%	ELECTRICAL COMPONENTS	27V520T		18-CB0103-JNX
R832	266322	RES. C.F. 10K OHM 1/6W +/-5%	ELECTRICAL COMPONENTS	24V511T		18-CB0103-JNX
R832	266322	RES. C.F. 10K OHM 1/6W +/-5%	ELECTRICAL COMPONENTS	24F512T		18-CB0103-JNX
R832	266322	RES. C.F. 10K OHM 1/6W +/-5%	ELECTRICAL COMPONENTS	27V512T		18-CB0103-JNX
R832	266322	RES. C.F. 10K OHM 1/6W +/-5%	ELECTRICAL COMPONENTS	27F630T		18-CB0103-JNX
R833	266322	RES. C.F. 10K OHM 1/6W +/-5%	ELECTRICAL COMPONENTS	27F520T		18-CB0103-JNX
R833	266322	RES. C.F. 10K OHM 1/6W +/-5%	ELECTRICAL COMPONENTS	27F630T		18-CB0103-JNX
R833	266322	RES. C.F. 10K OHM 1/6W +/-5%	ELECTRICAL COMPONENTS	27V513T		18-CB0103-JNX
R833	266322	RES. C.F. 10K OHM 1/6W +/-5%	ELECTRICAL COMPONENTS	24F512T		18-CB0103-JNX
R833	266322	RES. C.F. 10K OHM 1/6W +/-5%	ELECTRICAL COMPONENTS	27V512T		18-CB0103-JNX
R833	266322	RES. C.F. 10K OHM 1/6W +/-5%	ELECTRICAL COMPONENTS	24V511T		18-CB0103-JNX

Symbol	Stock	Description	Circuit	Model	TypeCode	Drawing
R833	266322	RES. C.F. 10K OHM 1/6W +/-5%	ELECTRICAL COMPONENTS	27V520T		18-CB0103-JNX
R834	268372	RES. C.F. 6.2K OHM 1/6W +/-5%	ELECTRICAL COMPONENTS	24F512T		18-CB0622-JNX
R834	268372	RES. C.F. 6.2K OHM 1/6W +/-5%	ELECTRICAL COMPONENTS	27F630T		18-CB0622-JNX
R834	268372	RES. C.F. 6.2K OHM 1/6W +/-5%	ELECTRICAL COMPONENTS	24V511T		18-CB0622-JNX
R834	268372	RES. C.F. 6.2K OHM 1/6W +/-5%	ELECTRICAL COMPONENTS	27V512T		18-CB0622-JNX
R834	268372	RES. C.F. 6.2K OHM 1/6W +/-5%	ELECTRICAL COMPONENTS	27V513T		18-CB0622-JNX
R834	268372	RES. C.F. 6.2K OHM 1/6W +/-5%	ELECTRICAL COMPONENTS	27V520T		18-CB0622-JNX
R834	268372	RES. C.F. 6.2K OHM 1/6W +/-5%	ELECTRICAL COMPONENTS	27F520T		18-CB0622-JNX
R835	268414	RES.M.F. 0.12MOHM 1/2W +/-1%	ELECTRICAL COMPONENTS	27F520T		18-DE0124-FNX
R835	268414	RES.M.F. 0.12MOHM 1/2W +/-1%	ELECTRICAL COMPONENTS	27V520T		18-DE0124-FNX
R835	268414	RES.M.F. 0.12MOHM 1/2W +/-1%	ELECTRICAL COMPONENTS	27V513T		18-DE0124-FNX
R835	268414	RES.M.F. 0.12MOHM 1/2W +/-1%	ELECTRICAL COMPONENTS	24F512T		18-DE0124-FNX
R835	268414	RES.M.F. 0.12MOHM 1/2W +/-1%	ELECTRICAL COMPONENTS	24V511T		18-DE0124-FNX
R835	268414	RES.M.F. 0.12MOHM 1/2W +/-1%	ELECTRICAL COMPONENTS	27F630T		18-DE0124-FNX
R835	268414	RES.M.F. 0.12MOHM 1/2W +/-1%	ELECTRICAL COMPONENTS	27V512T		18-DE0124-FNX
R836	268415	RES. C.F. 1K OHM 1/4W +/-5%	ELECTRICAL COMPONENTS	27F520T		18-CD0102-JNX
R836	268415	RES. C.F. 1K OHM 1/4W +/-5%	ELECTRICAL COMPONENTS	24V511T		18-CD0102-JNX
R836	268415	RES. C.F. 1K OHM 1/4W +/-5%	ELECTRICAL COMPONENTS	27V512T		18-CD0102-JNX
R836	268415	RES. C.F. 1K OHM 1/4W +/-5%	ELECTRICAL COMPONENTS	27F630T		18-CD0102-JNX
R836	268415	RES. C.F. 1K OHM 1/4W +/-5%	ELECTRICAL COMPONENTS	24F512T		18-CD0102-JNX
R836	268415	RES. C.F. 1K OHM 1/4W +/-5%	ELECTRICAL COMPONENTS	27V513T		18-CD0102-JNX
R836	268415	RES. C.F. 1K OHM 1/4W +/-5%	ELECTRICAL COMPONENTS	27V520T		18-CD0102-JNX
R837	266322	RES. C.F. 10K OHM 1/6W +/-5%	ELECTRICAL COMPONENTS	24F512T		18-CB0103-JNX
R837	266322	RES. C.F. 10K OHM 1/6W +/-5%	ELECTRICAL COMPONENTS	27V520T		18-CB0103-JNX
R837	266322	RES. C.F. 10K OHM 1/6W +/-5%	ELECTRICAL COMPONENTS	24V511T		18-CB0103-JNX
R837	266322	RES. C.F. 10K OHM 1/6W +/-5%	ELECTRICAL COMPONENTS	27V512T		18-CB0103-JNX
R837	266322	RES. C.F. 10K OHM 1/6W +/-5%	ELECTRICAL COMPONENTS	27V513T		18-CB0103-JNX
R837	266322	RES. C.F. 10K OHM 1/6W +/-5%	ELECTRICAL COMPONENTS	27F630T		18-CB0103-JNX
R837	266322	RES. C.F. 10K OHM 1/6W +/-5%	ELECTRICAL COMPONENTS	27F520T		18-CB0103-JNX
R838	266322	RES. C.F. 10K OHM 1/6W +/-5%	ELECTRICAL COMPONENTS	27V520T		18-CB0103-JNX
R838	266322	RES. C.F. 10K OHM 1/6W +/-5%	ELECTRICAL COMPONENTS	27V512T		18-CB0103-JNX
R838	266322	RES. C.F. 10K OHM 1/6W +/-5%	ELECTRICAL COMPONENTS	24V511T		18-CB0103-JNX
R838	266322	RES. C.F. 10K OHM 1/6W +/-5%	ELECTRICAL COMPONENTS	27F520T		18-CB0103-JNX
R838	266322	RES. C.F. 10K OHM 1/6W +/-5%	ELECTRICAL COMPONENTS	27F630T		18-CB0103-JNX
R838	266322	RES. C.F. 10K OHM 1/6W +/-5%	ELECTRICAL COMPONENTS	27V513T		18-CB0103-JNX
R838	266322	RES. C.F. 10K OHM 1/6W +/-5%	ELECTRICAL COMPONENTS	24F512T		18-CB0103-JNX
R840	266941	RES. H.VOLT.CC 8.2M OHM 1W	ELECTRICAL COMPONENTS	27V512T	S	18-KF0825-JH3
R840	266941	RES. H.VOLT.CC 8.2M OHM 1W	ELECTRICAL COMPONENTS	27F630T	S	18-KF0825-JH3
R840	266941	RES. H.VOLT.CC 8.2M OHM 1W	ELECTRICAL COMPONENTS	24F512T	S	18-KF0825-JH3
R840	266941	RES. H.VOLT.CC 8.2M OHM 1W	ELECTRICAL COMPONENTS	27F520T	S	18-KF0825-JH3
R840	266941	RES. H.VOLT.CC 8.2M OHM 1W	ELECTRICAL COMPONENTS	27V513T	S	18-KF0825-JH3
R840	266941	RES. H.VOLT.CC 8.2M OHM 1W	ELECTRICAL COMPONENTS	27V520T	S	18-KF0825-JH3
R840	266941	RES. H.VOLT.CC 8.2M OHM 1W	ELECTRICAL COMPONENTS	24V511T		18-KF0825-JH3
R901	266320	RES. C.F. 82 OHM 1/6W +/-5%	ELECTRICAL COMPONENTS	27V520T		18-CB0820-JNX
R901	266320	RES. C.F. 82 OHM 1/6W +/-5%	ELECTRICAL COMPONENTS	24F512T		18-CB0820-JNX
R901	266320	RES. C.F. 82 OHM 1/6W +/-5%	ELECTRICAL COMPONENTS	27V512T		18-CB0820-JNX
R901	266320	RES. C.F. 82 OHM 1/6W +/-5%	ELECTRICAL COMPONENTS	27F630T		18-CB0820-JNX
R901	266320	RES. C.F. 82 OHM 1/6W +/-5%	ELECTRICAL COMPONENTS	24V511T		18-CB0820-JNX
R901	266320	RES. C.F. 82 OHM 1/6W +/-5%	ELECTRICAL COMPONENTS	27V513T		18-CB0820-JNX
R901	266320	RES. C.F. 82 OHM 1/6W +/-5%	ELECTRICAL COMPONENTS	27F520T		18-CB0820-JNX
R902	266320	RES. C.F. 82 OHM 1/6W +/-5%	ELECTRICAL COMPONENTS	27V520T		18-CB0820-JNX
R902	266320	RES. C.F. 82 OHM 1/6W +/-5%	ELECTRICAL COMPONENTS	24V511T		18-CB0820-JNX
R902	266320	RES. C.F. 82 OHM 1/6W +/-5%	ELECTRICAL COMPONENTS	27F520T		18-CB0820-JNX
R902	266320	RES. C.F. 82 OHM 1/6W +/-5%	ELECTRICAL COMPONENTS	24F512T		18-CB0820-JNX
R902	266320	RES. C.F. 82 OHM 1/6W +/-5%	ELECTRICAL COMPONENTS	27V513T		18-CB0820-JNX
R902	266320	RES. C.F. 82 OHM 1/6W +/-5%	ELECTRICAL COMPONENTS	27V512T		18-CB0820-JNX
R902	266320	RES. C.F. 82 OHM 1/6W +/-5%	ELECTRICAL COMPONENTS	27F630T		18-CB0820-JNX
R903	266383	RES. C.F. 22K OHM 1/6W +/-5%	ELECTRICAL COMPONENTS	27F520T		18-CB0223-JNX
R903	266383	RES. C.F. 22K OHM 1/6W +/-5%	ELECTRICAL COMPONENTS	27V520T		18-CB0223-JNX
R903	266383	RES. C.F. 22K OHM 1/6W +/-5%	ELECTRICAL COMPONENTS	24V511T		18-CB0223-JNX

Symbol	Stock	Description	Circuit	Model	TypeCode	Drawing
R903	266383	RES. C.F. 22K OHM 1/6W +/-5%	ELECTRICAL COMPONENTS	27V513T		18-CB0223-JNX
R903	266383	RES. C.F. 22K OHM 1/6W +/-5%	ELECTRICAL COMPONENTS	27V512T		18-CB0223-JNX
R903	266383	RES. C.F. 22K OHM 1/6W +/-5%	ELECTRICAL COMPONENTS	27F630T		18-CB0223-JNX
R903	266383	RES. C.F. 22K OHM 1/6W +/-5%	ELECTRICAL COMPONENTS	24F512T		18-CB0223-JNX
R904	266255	RES. C.F. 1K OHM 1/6W +/-5%	ELECTRICAL COMPONENTS	24V511T		18-CB0102-JNX
R904	266255	RES. C.F. 1K OHM 1/6W +/-5%	ELECTRICAL COMPONENTS	27V512T		18-CB0102-JNX
R904	266255	RES. C.F. 1K OHM 1/6W +/-5%	ELECTRICAL COMPONENTS	27V513T		18-CB0102-JNX
R904	266255	RES. C.F. 1K OHM 1/6W +/-5%	ELECTRICAL COMPONENTS	24F512T		18-CB0102-JNX
R904	266255	RES. C.F. 1K OHM 1/6W +/-5%	ELECTRICAL COMPONENTS	27F520T		18-CB0102-JNX
R904	266255	RES. C.F. 1K OHM 1/6W +/-5%	ELECTRICAL COMPONENTS	27V520T		18-CB0102-JNX
R904	266255	RES. C.F. 1K OHM 1/6W +/-5%	ELECTRICAL COMPONENTS	27F630T		18-CB0102-JNX
R905	266383	RES. C.F. 22K OHM 1/6W +/-5%	ELECTRICAL COMPONENTS	24V511T		18-CB0223-JNX
R905	266383	RES. C.F. 22K OHM 1/6W +/-5%	ELECTRICAL COMPONENTS	27V520T		18-CB0223-JNX
R905	266383	RES. C.F. 22K OHM 1/6W +/-5%	ELECTRICAL COMPONENTS	27V513T		18-CB0223-JNX
R905	266383	RES. C.F. 22K OHM 1/6W +/-5%	ELECTRICAL COMPONENTS	24F512T		18-CB0223-JNX
R905	266383	RES. C.F. 22K OHM 1/6W +/-5%	ELECTRICAL COMPONENTS	27F520T		18-CB0223-JNX
R905	266383	RES. C.F. 22K OHM 1/6W +/-5%	ELECTRICAL COMPONENTS	27V512T		18-CB0223-JNX
R905	266383	RES. C.F. 22K OHM 1/6W +/-5%	ELECTRICAL COMPONENTS	27F630T		18-CB0223-JNX
R906	266255	RES. C.F. 1K OHM 1/6W +/-5%	ELECTRICAL COMPONENTS	24V511T		18-CB0102-JNX
R906	266255	RES. C.F. 1K OHM 1/6W +/-5%	ELECTRICAL COMPONENTS	24F512T		18-CB0102-JNX
R906	266255	RES. C.F. 1K OHM 1/6W +/-5%	ELECTRICAL COMPONENTS	27F630T		18-CB0102-JNX
R906	266255	RES. C.F. 1K OHM 1/6W +/-5%	ELECTRICAL COMPONENTS	27V520T		18-CB0102-JNX
R906	266255	RES. C.F. 1K OHM 1/6W +/-5%	ELECTRICAL COMPONENTS	27V513T		18-CB0102-JNX
R906	266255	RES. C.F. 1K OHM 1/6W +/-5%	ELECTRICAL COMPONENTS	27F520T		18-CB0102-JNX
R906	266255	RES. C.F. 1K OHM 1/6W +/-5%	ELECTRICAL COMPONENTS	27V512T		18-CB0102-JNX
R908	266320	RES. C.F. 82 OHM 1/6W +/-5%	ELECTRICAL COMPONENTS	24F512T		18-CB0820-JNX
R908	266320	RES. C.F. 82 OHM 1/6W +/-5%	ELECTRICAL COMPONENTS	27F630T		18-CB0820-JNX
R908	266320	RES. C.F. 82 OHM 1/6W +/-5%	ELECTRICAL COMPONENTS	27V520T		18-CB0820-JNX
R908	266320	RES. C.F. 82 OHM 1/6W +/-5%	ELECTRICAL COMPONENTS	24V511T		18-CB0820-JNX
R908	266320	RES. C.F. 82 OHM 1/6W +/-5%	ELECTRICAL COMPONENTS	27V513T		18-CB0820-JNX
R908	266320	RES. C.F. 82 OHM 1/6W +/-5%	ELECTRICAL COMPONENTS	27F520T		18-CB0820-JNX
R908	266320	RES. C.F. 82 OHM 1/6W +/-5%	ELECTRICAL COMPONENTS	27V512T		18-CB0820-JNX
R910	266255	RES. C.F. 1K OHM 1/6W +/-5%	ELECTRICAL COMPONENTS	24F512T		18-CB0102-JNX
R910	266255	RES. C.F. 1K OHM 1/6W +/-5%	ELECTRICAL COMPONENTS	27F520T		18-CB0102-JNX
R910	266255	RES. C.F. 1K OHM 1/6W +/-5%	ELECTRICAL COMPONENTS	27V513T		18-CB0102-JNX
R910	266255	RES. C.F. 1K OHM 1/6W +/-5%	ELECTRICAL COMPONENTS	27F630T		18-CB0102-JNX
R910	266255	RES. C.F. 1K OHM 1/6W +/-5%	ELECTRICAL COMPONENTS	24V511T		18-CB0102-JNX
R910	266255	RES. C.F. 1K OHM 1/6W +/-5%	ELECTRICAL COMPONENTS	27V512T		18-CB0102-JNX
R910	266255	RES. C.F. 1K OHM 1/6W +/-5%	ELECTRICAL COMPONENTS	27V520T		18-CB0102-JNX
R911	266255	RES. C.F. 1K OHM 1/6W +/-5%	ELECTRICAL COMPONENTS	24V511T		18-CB0102-JNX
R911	266255	RES. C.F. 1K OHM 1/6W +/-5%	ELECTRICAL COMPONENTS	27F630T		18-CB0102-JNX
R911	266255	RES. C.F. 1K OHM 1/6W +/-5%	ELECTRICAL COMPONENTS	27V520T		18-CB0102-JNX
R911	266255	RES. C.F. 1K OHM 1/6W +/-5%	ELECTRICAL COMPONENTS	24F512T		18-CB0102-JNX
R911	266255	RES. C.F. 1K OHM 1/6W +/-5%	ELECTRICAL COMPONENTS	27V513T		18-CB0102-JNX
R911	266255	RES. C.F. 1K OHM 1/6W +/-5%	ELECTRICAL COMPONENTS	27F520T		18-CB0102-JNX
R911	266255	RES. C.F. 1K OHM 1/6W +/-5%	ELECTRICAL COMPONENTS	27V512T		18-CB0102-JNX
R912	266255	RES. C.F. 1K OHM 1/6W +/-5%	ELECTRICAL COMPONENTS	24V511T		18-CB0102-JNX
R912	266255	RES. C.F. 1K OHM 1/6W +/-5%	ELECTRICAL COMPONENTS	27F630T		18-CB0102-JNX
R912	266255	RES. C.F. 1K OHM 1/6W +/-5%	ELECTRICAL COMPONENTS	27V512T		18-CB0102-JNX
R912	266255	RES. C.F. 1K OHM 1/6W +/-5%	ELECTRICAL COMPONENTS	27V520T		18-CB0102-JNX
R912	266255	RES. C.F. 1K OHM 1/6W +/-5%	ELECTRICAL COMPONENTS	27V513T		18-CB0102-JNX
R912	266255	RES. C.F. 1K OHM 1/6W +/-5%	ELECTRICAL COMPONENTS	27F520T		18-CB0102-JNX
R912	266255	RES. C.F. 1K OHM 1/6W +/-5%	ELECTRICAL COMPONENTS	24F512T		18-CB0102-JNX
R913	266255	RES. C.F. 1K OHM 1/6W +/-5%	ELECTRICAL COMPONENTS	27V513T		18-CB0102-JNX
R913	266255	RES. C.F. 1K OHM 1/6W +/-5%	ELECTRICAL COMPONENTS	27V512T		18-CB0102-JNX
R913	266255	RES. C.F. 1K OHM 1/6W +/-5%	ELECTRICAL COMPONENTS	24V511T		18-CB0102-JNX
R913	266255	RES. C.F. 1K OHM 1/6W +/-5%	ELECTRICAL COMPONENTS	27V520T		18-CB0102-JNX
R913	266255	RES. C.F. 1K OHM 1/6W +/-5%	ELECTRICAL COMPONENTS	27F520T		18-CB0102-JNX
R913	266255	RES. C.F. 1K OHM 1/6W +/-5%	ELECTRICAL COMPONENTS	27F630T		18-CB0102-JNX
R913	266255	RES. C.F. 1K OHM 1/6W +/-5%	ELECTRICAL COMPONENTS	24F512T		18-CB0102-JNX

Symbol	Stock	Description	Circuit	Model	TypeCode	Drawing
R914	266320	RES. C.F. 82 OHM 1/6W +/-5%	ELECTRICAL COMPONENTS	27F520T		18-CB0820-JNX
R914	266320	RES. C.F. 82 OHM 1/6W +/-5%	ELECTRICAL COMPONENTS	27V520T		18-CB0820-JNX
R914	266320	RES. C.F. 82 OHM 1/6W +/-5%	ELECTRICAL COMPONENTS	24F512T		18-CB0820-JNX
R914	266320	RES. C.F. 82 OHM 1/6W +/-5%	ELECTRICAL COMPONENTS	27F630T		18-CB0820-JNX
R915	266320	RES. C.F. 82 OHM 1/6W +/-5%	ELECTRICAL COMPONENTS	27F520T		18-CB0820-JNX
R915	266320	RES. C.F. 82 OHM 1/6W +/-5%	ELECTRICAL COMPONENTS	27V520T		18-CB0820-JNX
R915	266320	RES. C.F. 82 OHM 1/6W +/-5%	ELECTRICAL COMPONENTS	27F630T		18-CB0820-JNX
R915	266320	RES. C.F. 82 OHM 1/6W +/-5%	ELECTRICAL COMPONENTS	24F512T		18-CB0820-JNX
R916	266255	RES. C.F. 1K OHM 1/6W +/-5%	ELECTRICAL COMPONENTS	27V513T		18-CB0102-JNX
R916	266255	RES. C.F. 1K OHM 1/6W +/-5%	ELECTRICAL COMPONENTS	24F512T		18-CB0102-JNX
R916	266255	RES. C.F. 1K OHM 1/6W +/-5%	ELECTRICAL COMPONENTS	24V511T		18-CB0102-JNX
R916	266255	RES. C.F. 1K OHM 1/6W +/-5%	ELECTRICAL COMPONENTS	27F630T		18-CB0102-JNX
R916	266255	RES. C.F. 1K OHM 1/6W +/-5%	ELECTRICAL COMPONENTS	27F520T		18-CB0102-JNX
R916	266255	RES. C.F. 1K OHM 1/6W +/-5%	ELECTRICAL COMPONENTS	27V520T		18-CB0102-JNX
R916	266255	RES. C.F. 1K OHM 1/6W +/-5%	ELECTRICAL COMPONENTS	27V512T		18-CB0102-JNX
R917	266255	RES. C.F. 1K OHM 1/6W +/-5%	ELECTRICAL COMPONENTS	27F520T		18-CB0102-JNX
R917	266255	RES. C.F. 1K OHM 1/6W +/-5%	ELECTRICAL COMPONENTS	27V513T		18-CB0102-JNX
R917	266255	RES. C.F. 1K OHM 1/6W +/-5%	ELECTRICAL COMPONENTS	24V511T		18-CB0102-JNX
R917	266255	RES. C.F. 1K OHM 1/6W +/-5%	ELECTRICAL COMPONENTS	24F512T		18-CB0102-JNX
R917	266255	RES. C.F. 1K OHM 1/6W +/-5%	ELECTRICAL COMPONENTS	27F630T		18-CB0102-JNX
R917	266255	RES. C.F. 1K OHM 1/6W +/-5%	ELECTRICAL COMPONENTS	27V512T		18-CB0102-JNX
R917	266255	RES. C.F. 1K OHM 1/6W +/-5%	ELECTRICAL COMPONENTS	27V520T		18-CB0102-JNX
R920	266253	RES. C.F. 100 OHM 1/6W +/-5%	ELECTRICAL COMPONENTS	24F512T		18-CB0101-JNX
R920	266253	RES. C.F. 100 OHM 1/6W +/-5%	ELECTRICAL COMPONENTS	27V520T		18-CB0101-JNX
R920	266253	RES. C.F. 100 OHM 1/6W +/-5%	ELECTRICAL COMPONENTS	24V511T		18-CB0101-JNX
R920	266253	RES. C.F. 100 OHM 1/6W +/-5%	ELECTRICAL COMPONENTS	27F630T		18-CB0101-JNX
R920	266253	RES. C.F. 100 OHM 1/6W +/-5%	ELECTRICAL COMPONENTS	27F520T		18-CB0101-JNX
R923	268416	RES. C.F. 75 OHM 1/6W +/-5%	ELECTRICAL COMPONENTS	24F512T		18-CB0750-JNX
R923	268416	RES. C.F. 75 OHM 1/6W +/-5%	ELECTRICAL COMPONENTS	24V511T		18-CB0750-JNX
R923	268416	RES. C.F. 75 OHM 1/6W +/-5%	ELECTRICAL COMPONENTS	27V520T		18-CB0750-JNX
R923	268416	RES. C.F. 75 OHM 1/6W +/-5%	ELECTRICAL COMPONENTS	27F630T		18-CB0750-JNX
R923	268416	RES. C.F. 75 OHM 1/6W +/-5%	ELECTRICAL COMPONENTS	27F520T		18-CB0750-JNX
R924	266255	RES. C.F. 1K OHM 1/6W +/-5%	ELECTRICAL COMPONENTS	24F512T		18-CB0102-JNX
R924	266255	RES. C.F. 1K OHM 1/6W +/-5%	ELECTRICAL COMPONENTS	24V511T		18-CB0102-JNX
R924	266255	RES. C.F. 1K OHM 1/6W +/-5%	ELECTRICAL COMPONENTS	27V520T		18-CB0102-JNX
R924	266255	RES. C.F. 1K OHM 1/6W +/-5%	ELECTRICAL COMPONENTS	27F630T		18-CB0102-JNX
R924	266255	RES. C.F. 1K OHM 1/6W +/-5%	ELECTRICAL COMPONENTS	27F520T		18-CB0102-JNX
R925	266255	RES. C.F. 1K OHM 1/6W +/-5%	ELECTRICAL COMPONENTS	24F512T		18-CB0102-JNX
R925	266255	RES. C.F. 1K OHM 1/6W +/-5%	ELECTRICAL COMPONENTS	24V511T		18-CB0102-JNX
R925	266255	RES. C.F. 1K OHM 1/6W +/-5%	ELECTRICAL COMPONENTS	27V520T		18-CB0102-JNX
R925	266255	RES. C.F. 1K OHM 1/6W +/-5%	ELECTRICAL COMPONENTS	27F630T		18-CB0102-JNX
R925	266255	RES. C.F. 1K OHM 1/6W +/-5%	ELECTRICAL COMPONENTS	27F520T		18-CB0102-JNX
R926	266255	RES. C.F. 1K OHM 1/6W +/-5%	ELECTRICAL COMPONENTS	27F630T		18-CB0102-JNX
R926	266255	RES. C.F. 1K OHM 1/6W +/-5%	ELECTRICAL COMPONENTS	24V511T		18-CB0102-JNX
R926	266255	RES. C.F. 1K OHM 1/6W +/-5%	ELECTRICAL COMPONENTS	27V520T		18-CB0102-JNX
R926	266255	RES. C.F. 1K OHM 1/6W +/-5%	ELECTRICAL COMPONENTS	24F512T		18-CB0102-JNX
R926	266255	RES. C.F. 1K OHM 1/6W +/-5%	ELECTRICAL COMPONENTS	27F520T		18-CB0102-JNX
R929	266255	RES. C.F. 1K OHM 1/6W +/-5%	ELECTRICAL COMPONENTS	24F512T		18-CB0102-JNX
R929	266255	RES. C.F. 1K OHM 1/6W +/-5%	ELECTRICAL COMPONENTS	27F630T		18-CB0102-JNX
R929	266255	RES. C.F. 1K OHM 1/6W +/-5%	ELECTRICAL COMPONENTS	27V520T		18-CB0102-JNX
R929	266255	RES. C.F. 1K OHM 1/6W +/-5%	ELECTRICAL COMPONENTS	27F520T		18-CB0102-JNX
R929	266255	RES. C.F. 1K OHM 1/6W +/-5%	ELECTRICAL COMPONENTS	24V511T		18-CB0102-JNX
R930	266365	RES. C.F. 220 OHM 1/6W +/-5%	ELECTRICAL COMPONENTS	24F512T		18-CB0221-JNX
R930	266365	RES. C.F. 220 OHM 1/6W +/-5%	ELECTRICAL COMPONENTS	24V511T		18-CB0221-JNX
R930	266365	RES. C.F. 220 OHM 1/6W +/-5%	ELECTRICAL COMPONENTS	27F520T		18-CB0221-JNX
R930	266365	RES. C.F. 220 OHM 1/6W +/-5%	ELECTRICAL COMPONENTS	27V520T		18-CB0221-JNX
R930	266365	RES. C.F. 220 OHM 1/6W +/-5%	ELECTRICAL COMPONENTS	27F630T		18-CB0221-JNX
R931	266365	RES. C.F. 220 OHM 1/6W +/-5%	ELECTRICAL COMPONENTS	27F520T		18-CB0221-JNX
R931	266365	RES. C.F. 220 OHM 1/6W +/-5%	ELECTRICAL COMPONENTS	24V511T		18-CB0221-JNX
R931	266365	RES. C.F. 220 OHM 1/6W +/-5%	ELECTRICAL COMPONENTS	24F512T		18-CB0221-JNX

Symbol	Stock	Description	Circuit	Model	TypeCode	Drawing
R931	266365	RES. C.F. 220 OHM 1/6W +/-5%	ELECTRICAL COMPONENTS	27V520T		18-CB0221-JNX
R931	266365	RES. C.F. 220 OHM 1/6W +/-5%	ELECTRICAL COMPONENTS	27F630T		18-CB0221-JNX
R932	266255	RES. C.F. 1K OHM 1/6W +/-5%	ELECTRICAL COMPONENTS	24V511T		18-CB0102-JNX
R932	266255	RES. C.F. 1K OHM 1/6W +/-5%	ELECTRICAL COMPONENTS	24F512T		18-CB0102-JNX
R932	266255	RES. C.F. 1K OHM 1/6W +/-5%	ELECTRICAL COMPONENTS	27V512T		18-CB0102-JNX
R932	266255	RES. C.F. 1K OHM 1/6W +/-5%	ELECTRICAL COMPONENTS	27V520T		18-CB0102-JNX
R932	266255	RES. C.F. 1K OHM 1/6W +/-5%	ELECTRICAL COMPONENTS	27F630T		18-CB0102-JNX
R932	266255	RES. C.F. 1K OHM 1/6W +/-5%	ELECTRICAL COMPONENTS	27V513T		18-CB0102-JNX
R932	266255	RES. C.F. 1K OHM 1/6W +/-5%	ELECTRICAL COMPONENTS	27F520T		18-CB0102-JNX
R932A	266255	RES. C.F. 1K OHM 1/6W +/-5%	ELECTRICAL COMPONENTS	24V511T		18-CB0102-JNX
R932A	266255	RES. C.F. 1K OHM 1/6W +/-5%	ELECTRICAL COMPONENTS	27V513T		18-CB0102-JNX
R932A	266255	RES. C.F. 1K OHM 1/6W +/-5%	ELECTRICAL COMPONENTS	27V520T		18-CB0102-JNX
R932A	266255	RES. C.F. 1K OHM 1/6W +/-5%	ELECTRICAL COMPONENTS	24F512T		18-CB0102-JNX
R932A	266255	RES. C.F. 1K OHM 1/6W +/-5%	ELECTRICAL COMPONENTS	27V512T		18-CB0102-JNX
R932A	266255	RES. C.F. 1K OHM 1/6W +/-5%	ELECTRICAL COMPONENTS	27F520T		18-CB0102-JNX
R932A	266255	RES. C.F. 1K OHM 1/6W +/-5%	ELECTRICAL COMPONENTS	27F630T		18-CB0102-JNX
R933	266918	RES. C.F. 15K OHM 1/6W +/-5%	ELECTRICAL COMPONENTS	24F512T		18-CB0153-JNX
R933	266918	RES. C.F. 15K OHM 1/6W +/-5%	ELECTRICAL COMPONENTS	27F520T		18-CB0153-JNX
R933	266918	RES. C.F. 15K OHM 1/6W +/-5%	ELECTRICAL COMPONENTS	27F630T		18-CB0153-JNX
R933	266918	RES. C.F. 15K OHM 1/6W +/-5%	ELECTRICAL COMPONENTS	24V511T		18-CB0153-JNX
R933	266918	RES. C.F. 15K OHM 1/6W +/-5%	ELECTRICAL COMPONENTS	27V520T		18-CB0153-JNX
R934	266255	RES. C.F. 1K OHM 1/6W +/-5%	ELECTRICAL COMPONENTS	27V520T		18-CB0102-JNX
R934	266255	RES. C.F. 1K OHM 1/6W +/-5%	ELECTRICAL COMPONENTS	27F630T		18-CB0102-JNX
R934	266255	RES. C.F. 1K OHM 1/6W +/-5%	ELECTRICAL COMPONENTS	24F512T		18-CB0102-JNX
R934	266255	RES. C.F. 1K OHM 1/6W +/-5%	ELECTRICAL COMPONENTS	27V513T		18-CB0102-JNX
R934	266255	RES. C.F. 1K OHM 1/6W +/-5%	ELECTRICAL COMPONENTS	27V512T		18-CB0102-JNX
R934	266255	RES. C.F. 1K OHM 1/6W +/-5%	ELECTRICAL COMPONENTS	27F520T		18-CB0102-JNX
R934	266255	RES. C.F. 1K OHM 1/6W +/-5%	ELECTRICAL COMPONENTS	24V511T		18-CB0102-JNX
R934A	266255	RES. C.F. 1K OHM 1/6W +/-5%	ELECTRICAL COMPONENTS	24V511T		18-CB0102-JNX
R934A	266255	RES. C.F. 1K OHM 1/6W +/-5%	ELECTRICAL COMPONENTS	27F630T		18-CB0102-JNX
R934A	266255	RES. C.F. 1K OHM 1/6W +/-5%	ELECTRICAL COMPONENTS	27V520T		18-CB0102-JNX
R934A	266255	RES. C.F. 1K OHM 1/6W +/-5%	ELECTRICAL COMPONENTS	27V513T		18-CB0102-JNX
R934A	266255	RES. C.F. 1K OHM 1/6W +/-5%	ELECTRICAL COMPONENTS	24F512T		18-CB0102-JNX
R934A	266255	RES. C.F. 1K OHM 1/6W +/-5%	ELECTRICAL COMPONENTS	27F520T		18-CB0102-JNX
R934A	266255	RES. C.F. 1K OHM 1/6W +/-5%	ELECTRICAL COMPONENTS	27V512T		18-CB0102-JNX
R935	266383	RES. C.F. 22K OHM 1/6W +/-5%	ELECTRICAL COMPONENTS	24V511T		18-CB0223-JNX
R935	266383	RES. C.F. 22K OHM 1/6W +/-5%	ELECTRICAL COMPONENTS	27F630T		18-CB0223-JNX
R935	266383	RES. C.F. 22K OHM 1/6W +/-5%	ELECTRICAL COMPONENTS	27V520T		18-CB0223-JNX
R935	266383	RES. C.F. 22K OHM 1/6W +/-5%	ELECTRICAL COMPONENTS	27F520T		18-CB0223-JNX
R935	266383	RES. C.F. 22K OHM 1/6W +/-5%	ELECTRICAL COMPONENTS	24F512T		18-CB0223-JNX
R936	266255	RES. C.F. 1K OHM 1/6W +/-5%	ELECTRICAL COMPONENTS	24F512T		18-CB0102-JNX
R936	266255	RES. C.F. 1K OHM 1/6W +/-5%	ELECTRICAL COMPONENTS	24V511T		18-CB0102-JNX
R936	266255	RES. C.F. 1K OHM 1/6W +/-5%	ELECTRICAL COMPONENTS	27V520T		18-CB0102-JNX
R936	266255	RES. C.F. 1K OHM 1/6W +/-5%	ELECTRICAL COMPONENTS	27F520T		18-CB0102-JNX
R936	266255	RES. C.F. 1K OHM 1/6W +/-5%	ELECTRICAL COMPONENTS	27F630T		18-CB0102-JNX
R937	266916	RES. C.F. 10 OHM 1/6W +/-5%	ELECTRICAL COMPONENTS	27V520T		18-CB0100-JNX
R937	266916	RES. C.F. 10 OHM 1/6W +/-5%	ELECTRICAL COMPONENTS	24F512T		18-CB0100-JNX
R937	266916	RES. C.F. 10 OHM 1/6W +/-5%	ELECTRICAL COMPONENTS	24V511T		18-CB0100-JNX
R937	266916	RES. C.F. 10 OHM 1/6W +/-5%	ELECTRICAL COMPONENTS	27F630T		18-CB0100-JNX
R937	266916	RES. C.F. 10 OHM 1/6W +/-5%	ELECTRICAL COMPONENTS	27F520T		18-CB0100-JNX
R944	266322	RES. C.F. 10K OHM 1/6W +/-5%	ELECTRICAL COMPONENTS	27F520T		18-CB0103-JNX
R944	266322	RES. C.F. 10K OHM 1/6W +/-5%	ELECTRICAL COMPONENTS	27V512T		18-CB0103-JNX
R944	266322	RES. C.F. 10K OHM 1/6W +/-5%	ELECTRICAL COMPONENTS	27F630T		18-CB0103-JNX
R944	266322	RES. C.F. 10K OHM 1/6W +/-5%	ELECTRICAL COMPONENTS	27V520T		18-CB0103-JNX
R944	266322	RES. C.F. 10K OHM 1/6W +/-5%	ELECTRICAL COMPONENTS	24F512T		18-CB0103-JNX
R944	266322	RES. C.F. 10K OHM 1/6W +/-5%	ELECTRICAL COMPONENTS	27V513T		18-CB0103-JNX
R944	266322	RES. C.F. 10K OHM 1/6W +/-5%	ELECTRICAL COMPONENTS	24V511T		18-CB0103-JNX
R945	266322	RES. C.F. 10K OHM 1/6W +/-5%	ELECTRICAL COMPONENTS	27V512T		18-CB0103-JNX
R945	266322	RES. C.F. 10K OHM 1/6W +/-5%	ELECTRICAL COMPONENTS	24V511T		18-CB0103-JNX
R945	266322	RES. C.F. 10K OHM 1/6W +/-5%	ELECTRICAL COMPONENTS	27F630T		18-CB0103-JNX

Symbol	Stock	Description	Circuit	Model	TypeCode	Drawing
R945	266322	RES. C.F. 10K OHM 1/6W +/-5%	ELECTRICAL COMPONENTS	27V520T		18-CB0103-JNX
R945	266322	RES. C.F. 10K OHM 1/6W +/-5%	ELECTRICAL COMPONENTS	27F520T		18-CB0103-JNX
R945	266322	RES. C.F. 10K OHM 1/6W +/-5%	ELECTRICAL COMPONENTS	27V513T		18-CB0103-JNX
R945	266322	RES. C.F. 10K OHM 1/6W +/-5%	ELECTRICAL COMPONENTS	24F512T		18-CB0103-JNX
R946	266271	RES. C.F. 2.2K OHM 1/6W +/-5%	ELECTRICAL COMPONENTS	27F520T		18-CB0222-JNX
R946	266271	RES. C.F. 2.2K OHM 1/6W +/-5%	ELECTRICAL COMPONENTS	27V520T		18-CB0222-JNX
R946	266271	RES. C.F. 2.2K OHM 1/6W +/-5%	ELECTRICAL COMPONENTS	24V511T		18-CB0222-JNX
R946	266271	RES. C.F. 2.2K OHM 1/6W +/-5%	ELECTRICAL COMPONENTS	27V513T		18-CB0222-JNX
R946	266271	RES. C.F. 2.2K OHM 1/6W +/-5%	ELECTRICAL COMPONENTS	27F630T		18-CB0222-JNX
R946	266271	RES. C.F. 2.2K OHM 1/6W +/-5%	ELECTRICAL COMPONENTS	24F512T		18-CB0222-JNX
R946	266271	RES. C.F. 2.2K OHM 1/6W +/-5%	ELECTRICAL COMPONENTS	27V512T		18-CB0222-JNX
R946A	266271	RES. C.F. 2.2K OHM 1/6W +/-5%	ELECTRICAL COMPONENTS	24V511T		18-CB0222-JNX
R946A	266271	RES. C.F. 2.2K OHM 1/6W +/-5%	ELECTRICAL COMPONENTS	24F512T		18-CB0222-JNX
R946A	266271	RES. C.F. 2.2K OHM 1/6W +/-5%	ELECTRICAL COMPONENTS	27F520T		18-CB0222-JNX
R946A	266271	RES. C.F. 2.2K OHM 1/6W +/-5%	ELECTRICAL COMPONENTS	27V513T		18-CB0222-JNX
R946A	266271	RES. C.F. 2.2K OHM 1/6W +/-5%	ELECTRICAL COMPONENTS	27V520T		18-CB0222-JNX
R946A	266271	RES. C.F. 2.2K OHM 1/6W +/-5%	ELECTRICAL COMPONENTS	27V512T		18-CB0222-JNX
R946A	266271	RES. C.F. 2.2K OHM 1/6W +/-5%	ELECTRICAL COMPONENTS	27F630T		18-CB0222-JNX
R947	266596	RES. C.F. 100K OHM 1/6W +/-5%	ELECTRICAL COMPONENTS	27F630T		18-CB0104-JNX
R947	266596	RES. C.F. 100K OHM 1/6W +/-5%	ELECTRICAL COMPONENTS	24V511T		18-CB0104-JNX
R947	266596	RES. C.F. 100K OHM 1/6W +/-5%	ELECTRICAL COMPONENTS	27V520T		18-CB0104-JNX
R947	266596	RES. C.F. 100K OHM 1/6W +/-5%	ELECTRICAL COMPONENTS	27V513T		18-CB0104-JNX
R947	266596	RES. C.F. 100K OHM 1/6W +/-5%	ELECTRICAL COMPONENTS	24F512T		18-CB0104-JNX
R947	266596	RES. C.F. 100K OHM 1/6W +/-5%	ELECTRICAL COMPONENTS	27V512T		18-CB0104-JNX
R947	266596	RES. C.F. 100K OHM 1/6W +/-5%	ELECTRICAL COMPONENTS	27F520T		18-CB0104-JNX
R948	266255	RES. C.F. 1K OHM 1/6W +/-5%	ELECTRICAL COMPONENTS	24V511T		18-CB0102-JNX
R948	266255	RES. C.F. 1K OHM 1/6W +/-5%	ELECTRICAL COMPONENTS	27V513T		18-CB0102-JNX
R948	266255	RES. C.F. 1K OHM 1/6W +/-5%	ELECTRICAL COMPONENTS	27F520T		18-CB0102-JNX
R948	266255	RES. C.F. 1K OHM 1/6W +/-5%	ELECTRICAL COMPONENTS	24F512T		18-CB0102-JNX
R948	266255	RES. C.F. 1K OHM 1/6W +/-5%	ELECTRICAL COMPONENTS	27V512T		18-CB0102-JNX
R948	266255	RES. C.F. 1K OHM 1/6W +/-5%	ELECTRICAL COMPONENTS	27V520T		18-CB0102-JNX
R948	266255	RES. C.F. 1K OHM 1/6W +/-5%	ELECTRICAL COMPONENTS	27F630T		18-CB0102-JNX
R951	266383	RES. C.F. 22K OHM 1/6W +/-5%	ELECTRICAL COMPONENTS	24V511T		18-CB0223-JNX
R951	266383	RES. C.F. 22K OHM 1/6W +/-5%	ELECTRICAL COMPONENTS	27F520T		18-CB0223-JNX
R951	266383	RES. C.F. 22K OHM 1/6W +/-5%	ELECTRICAL COMPONENTS	27F630T		18-CB0223-JNX
R951	266383	RES. C.F. 22K OHM 1/6W +/-5%	ELECTRICAL COMPONENTS	27V512T		18-CB0223-JNX
R951	266383	RES. C.F. 22K OHM 1/6W +/-5%	ELECTRICAL COMPONENTS	24F512T		18-CB0223-JNX
R951	266383	RES. C.F. 22K OHM 1/6W +/-5%	ELECTRICAL COMPONENTS	27V520T		18-CB0223-JNX
R951	266383	RES. C.F. 22K OHM 1/6W +/-5%	ELECTRICAL COMPONENTS	27V513T		18-CB0223-JNX
R952	266383	RES. C.F. 22K OHM 1/6W +/-5%	ELECTRICAL COMPONENTS	27V520T		18-CB0223-JNX
R952	266383	RES. C.F. 22K OHM 1/6W +/-5%	ELECTRICAL COMPONENTS	24F512T		18-CB0223-JNX
R952	266383	RES. C.F. 22K OHM 1/6W +/-5%	ELECTRICAL COMPONENTS	27F630T		18-CB0223-JNX
R952	266383	RES. C.F. 22K OHM 1/6W +/-5%	ELECTRICAL COMPONENTS	24V511T		18-CB0223-JNX
R952	266383	RES. C.F. 22K OHM 1/6W +/-5%	ELECTRICAL COMPONENTS	27V513T		18-CB0223-JNX
R952	266383	RES. C.F. 22K OHM 1/6W +/-5%	ELECTRICAL COMPONENTS	27F520T		18-CB0223-JNX
R952	266383	RES. C.F. 22K OHM 1/6W +/-5%	ELECTRICAL COMPONENTS	27V512T		18-CB0223-JNX
R953	266383	RES. C.F. 22K OHM 1/6W +/-5%	ELECTRICAL COMPONENTS	27V512T		18-CB0223-JNX
R953	266383	RES. C.F. 22K OHM 1/6W +/-5%	ELECTRICAL COMPONENTS	27V520T		18-CB0223-JNX
R953	266383	RES. C.F. 22K OHM 1/6W +/-5%	ELECTRICAL COMPONENTS	27F520T		18-CB0223-JNX
R953	266383	RES. C.F. 22K OHM 1/6W +/-5%	ELECTRICAL COMPONENTS	27V513T		18-CB0223-JNX
R953	266383	RES. C.F. 22K OHM 1/6W +/-5%	ELECTRICAL COMPONENTS	24V511T		18-CB0223-JNX
R953	266383	RES. C.F. 22K OHM 1/6W +/-5%	ELECTRICAL COMPONENTS	24F512T		18-CB0223-JNX
R953	266383	RES. C.F. 22K OHM 1/6W +/-5%	ELECTRICAL COMPONENTS	27F630T		18-CB0223-JNX
R954	266383	RES. C.F. 22K OHM 1/6W +/-5%	ELECTRICAL COMPONENTS	24V511T		18-CB0223-JNX
R954	266383	RES. C.F. 22K OHM 1/6W +/-5%	ELECTRICAL COMPONENTS	27V513T		18-CB0223-JNX
R954	266383	RES. C.F. 22K OHM 1/6W +/-5%	ELECTRICAL COMPONENTS	27F520T		18-CB0223-JNX
R954	266383	RES. C.F. 22K OHM 1/6W +/-5%	ELECTRICAL COMPONENTS	27V520T		18-CB0223-JNX
R954	266383	RES. C.F. 22K OHM 1/6W +/-5%	ELECTRICAL COMPONENTS	24F512T		18-CB0223-JNX
R954	266383	RES. C.F. 22K OHM 1/6W +/-5%	ELECTRICAL COMPONENTS	27V512T		18-CB0223-JNX
R954	266383	RES. C.F. 22K OHM 1/6W +/-5%	ELECTRICAL COMPONENTS	27F630T		18-CB0223-JNX

Symbol	Stock	Description	Circuit	Model	TypeCode	Drawing
RECEIVER	266876	IR RECEIVER MODULE	ELECTRICAL COMPONENTS	27V513T		02-IRR001-XX5
RECEIVER	266876	IR RECEIVER MODULE	ELECTRICAL COMPONENTS	27V512T		02-IRR001-XX5
REMOTE	265714	REMOTE TRANSMITTER: RCR130TB1	INSTRUMENT	24F512T		06-015W31-A000X
REMOTE	265714	REMOTE TRANSMITTER: RCR130TB1	INSTRUMENT	27F630T		06-015W31-A000X
REMOTE	265714	REMOTE TRANSMITTER: RCR130TB1	INSTRUMENT	27V520T		06-015W31-A000X
REMOTE	265714	REMOTE TRANSMITTER: RCR130TB1	ELECTRICAL COMPONENTS	27F630T		06-015W31-A000X
REMOTE	265714	REMOTE TRANSMITTER: RCR130TB1	INSTRUMENT	27V513T		06-015W31-A000X
REMOTE	265714	REMOTE TRANSMITTER: RCR130TB1	INSTRUMENT	27F520T		06-015W31-A000X
REMOTE	265714	REMOTE TRANSMITTER: RCR130TB1	INSTRUMENT	24V511T		06-015W31-A000X
REMOTE	265714	REMOTE TRANSMITTER: RCR130TB1	INSTRUMENT	27V512T		06-015W31-A000X
RL01	268417	RELAY POWER SMIT-SS-112DM 12V	ELECTRICAL COMPONENTS	24F512T	S	43-TSS112-DMX
RL01	268417	RELAY POWER SMIT-SS-112DM 12V	ELECTRICAL COMPONENTS	24V511T		43-TSS112-DMX
RL01	268417	RELAY POWER SMIT-SS-112DM 12V	ELECTRICAL COMPONENTS	27V513T	S	43-TSS112-DMX
RL01	268417	RELAY POWER SMIT-SS-112DM 12V	ELECTRICAL COMPONENTS	27F630T	S	43-TSS112-DMX
RL01	268417	RELAY POWER SMIT-SS-112DM 12V	ELECTRICAL COMPONENTS	27V512T	S	43-TSS112-DMX
RL01	268417	RELAY POWER SMIT-SS-112DM 12V	ELECTRICAL COMPONENTS	27V520T	S	43-TSS112-DMX
RL01	268417	RELAY POWER SMIT-SS-112DM 12V	ELECTRICAL COMPONENTS	27F520T	S	43-TSS112-DMX
RT801	268418	PTC 9 OHM	ELECTRICAL COMPONENTS	27F630T	S	22-PTC909-3A5
RT801	268418	PTC 9 OHM	ELECTRICAL COMPONENTS	27V513T	S	22-PTC909-3A5
RT801	268418	PTC 9 OHM	ELECTRICAL COMPONENTS	27V512T	S	22-PTC909-3A5
RT801	268418	PTC 9 OHM	ELECTRICAL COMPONENTS	24V511T		22-PTC909-3A5
RT801	268418	PTC 9 OHM	ELECTRICAL COMPONENTS	27F520T	S	22-PTC909-3A5
RT801	268418	PTC 9 OHM	ELECTRICAL COMPONENTS	27V520T	S	22-PTC909-3A5
RT801	268418	PTC 9 OHM	ELECTRICAL COMPONENTS	24F512T	S	22-PTC909-3A5
RT802	266357	NTC 4.7 OHM +/-18%	ELECTRICAL COMPONENTS	27V513T	S	22-NTC479-XX0
RT802	266357	NTC 4.7 OHM +/-18%	ELECTRICAL COMPONENTS	27V520T	S	22-NTC479-XX0
RT802	266357	NTC 4.7 OHM +/-18%	ELECTRICAL COMPONENTS	27F520T	S	22-NTC479-XX0
RT802	266357	NTC 4.7 OHM +/-18%	ELECTRICAL COMPONENTS	24V511T		22-NTC479-XX0
RT802	266357	NTC 4.7 OHM +/-18%	ELECTRICAL COMPONENTS	27V512T	S	22-NTC479-XX0
RT802	266357	NTC 4.7 OHM +/-18%	ELECTRICAL COMPONENTS	24F512T	S	22-NTC479-XX0
RT802	266357	NTC 4.7 OHM +/-18%	ELECTRICAL COMPONENTS	27F630T	S	22-NTC479-XX0
S001A	266289	TACT SWITCH	ELECTRICAL COMPONENTS	24V511T		48-TAC001-XX0
S001A	266289	TACT SWITCH	ELECTRICAL COMPONENTS	24F512T		48-TAC001-XX0
S002A	267136	TACT SWITCH	ELECTRICAL COMPONENTS	27F520T		48-TAC002-XX0
S002A	267136	TACT SWITCH	ELECTRICAL COMPONENTS	27V512T		48-TAC002-XX0
S002A	267136	TACT SWITCH	ELECTRICAL COMPONENTS	27F630T		48-TAC002-XX0
S002A	267136	TACT SWITCH	ELECTRICAL COMPONENTS	27V513T		48-TAC002-XX0
S002A	266289	TACT SWITCH	ELECTRICAL COMPONENTS	24F512T		48-TAC001-XX0
S002A	267136	TACT SWITCH	ELECTRICAL COMPONENTS	27V520T		48-TAC002-XX0
S002A	266289	TACT SWITCH	ELECTRICAL COMPONENTS	24V511T		48-TAC001-XX0
S003A	267136	TACT SWITCH	ELECTRICAL COMPONENTS	27V512T		48-TAC002-XX0
S003A	267136	TACT SWITCH	ELECTRICAL COMPONENTS	27F520T		48-TAC002-XX0
S003A	267136	TACT SWITCH	ELECTRICAL COMPONENTS	27F630T		48-TAC002-XX0
S003A	266289	TACT SWITCH	ELECTRICAL COMPONENTS	24F512T		48-TAC001-XX0
S003A	267136	TACT SWITCH	ELECTRICAL COMPONENTS	27V520T		48-TAC002-XX0
S003A	266289	TACT SWITCH	ELECTRICAL COMPONENTS	24V511T		48-TAC001-XX0
S003A	267136	TACT SWITCH	ELECTRICAL COMPONENTS	27V513T		48-TAC002-XX0
S004A	267136	TACT SWITCH	ELECTRICAL COMPONENTS	27V512T		48-TAC002-XX0
S004A	267136	TACT SWITCH	ELECTRICAL COMPONENTS	27F630T		48-TAC002-XX0
S004A	266289	TACT SWITCH	ELECTRICAL COMPONENTS	24V511T		48-TAC001-XX0
S004A	267136	TACT SWITCH	ELECTRICAL COMPONENTS	27V520T		48-TAC002-XX0
S004A	266289	TACT SWITCH	ELECTRICAL COMPONENTS	24F512T		48-TAC001-XX0
S004A	267136	TACT SWITCH	ELECTRICAL COMPONENTS	27V513T		48-TAC002-XX0
S004A	267136	TACT SWITCH	ELECTRICAL COMPONENTS	27F520T		48-TAC002-XX0
S005A	267136	TACT SWITCH	ELECTRICAL COMPONENTS	27F520T		48-TAC002-XX0
S005A	267136	TACT SWITCH	ELECTRICAL COMPONENTS	27V520T		48-TAC002-XX0
S005A	267136	TACT SWITCH	ELECTRICAL COMPONENTS	27V512T		48-TAC002-XX0
S005A	267136	TACT SWITCH	ELECTRICAL COMPONENTS	27F630T		48-TAC002-XX0
S005A	266289	TACT SWITCH	ELECTRICAL COMPONENTS	24F512T		48-TAC001-XX0
S005A	267136	TACT SWITCH	ELECTRICAL COMPONENTS	27V513T		48-TAC002-XX0

Symbol	Stock	Description	Circuit	Model	TypeCode	Drawing
S005A	266289	TACT SWITCH	ELECTRICAL COMPONENTS	24V511T		48-TAC001-XX0
S006A	266289	TACT SWITCH	ELECTRICAL COMPONENTS	24V511T		48-TAC001-XX0
S006A	267136	TACT SWITCH	ELECTRICAL COMPONENTS	27V513T		48-TAC002-XX0
S006A	267136	TACT SWITCH	ELECTRICAL COMPONENTS	27F630T		48-TAC002-XX0
S006A	267136	TACT SWITCH	ELECTRICAL COMPONENTS	27V520T		48-TAC002-XX0
S006A	266289	TACT SWITCH	ELECTRICAL COMPONENTS	24F512T		48-TAC001-XX0
S006A	267136	TACT SWITCH	ELECTRICAL COMPONENTS	27V512T		48-TAC002-XX0
S006A	267136	TACT SWITCH	ELECTRICAL COMPONENTS	27F520T		48-TAC002-XX0
S008	267136	TACT SWITCH	ELECTRICAL COMPONENTS	27V513T		48-TAC002-XX0
S008	267136	TACT SWITCH	ELECTRICAL COMPONENTS	24V511T		48-TAC002-XX0
S008	267136	TACT SWITCH	ELECTRICAL COMPONENTS	27F630T		48-TAC002-XX0
S008	266289	TACT SWITCH	ELECTRICAL COMPONENTS	24F512T		48-TAC001-XX0
S008	267136	TACT SWITCH	ELECTRICAL COMPONENTS	27V520T		48-TAC002-XX0
S008	267136	TACT SWITCH	ELECTRICAL COMPONENTS	27F520T		48-TAC002-XX0
S008	267136	TACT SWITCH	ELECTRICAL COMPONENTS	27V512T		48-TAC002-XX0
S501	266290	CRT SOCKET GZS10-2-AC2	ELECTRICAL COMPONENTS	24F512T	S	47-CRT004-XX0
S501	266290	CRT SOCKET GZS10-2-AC2	ELECTRICAL COMPONENTS	27V513T	S	47-CRT004-XX0
S501	266290	CRT SOCKET GZS10-2-AC2	ELECTRICAL COMPONENTS	27V520T	S	47-CRT004-XX0
S501	266290	CRT SOCKET GZS10-2-AC2	ELECTRICAL COMPONENTS	27V512T	S	47-CRT004-XX0
S501	266290	CRT SOCKET GZS10-2-AC2	ELECTRICAL COMPONENTS	27F520T	S	47-CRT004-XX0
S501	266290	CRT SOCKET GZS10-2-AC2	ELECTRICAL COMPONENTS	24V511T		47-CRT004-XX0
S501	266290	CRT SOCKET GZS10-2-AC2	ELECTRICAL COMPONENTS	27F630T	S	47-CRT004-XX0
SCREW	268471	SCREW B 4 X 15 AB	INSTRUMENT	24F512T		63-B40150-AB4
SCREW	258022	SCREW, KINE MOUNTING	INSTRUMENT	27F520T		25071430
SCREW	258003	SCREW, KINE MOUNTING	INSTRUMENT	27V512T		64078118
SCREW	258003	SCREW, KINE MOUNTING	INSTRUMENT	27V513T		64078118
SPACER	257988	CRT MOUNTING GROMMET	INSTRUMENT	27F520T		25587590
SPACER	257988	CRT MOUNTING GROMMET	INSTRUMENT	27F630T		25587590
SPACER	267049	SPACER CRT MOUNTING T=2MM	INSTRUMENT	24V511T		54-205140-000
SPEAKER	268472	SPEAKER 16 OHM 5W	INSTRUMENT	24F512T		42-61316D-XX1
SPEAKER	268501	SPEAKER	INSTRUMENT	27V520T		25768230
SPEAKER	268497	SPEAKER	INSTRUMENT	27V512T		2576823000
SPEAKER	268488	SPEAKER 16 OHM	INSTRUMENT	24V511T		35797940
SPEAKER	268459	12W 16OHM 60X160MM	INSTRUMENT	27F520T		2564963000
SPEAKER	268497	SPEAKER	INSTRUMENT	27V513T		2576823000
SPRING	268460	SPRING CRT 6X50	INSTRUMENT	27F630T		16419090
SPRING	268460	SPRING CRT 6X50	INSTRUMENT	27F520T		16419090
SPRING	268460	SPRING CRT 6X50	INSTRUMENT	27V512T		16419090
SPRING	268460	SPRING CRT 6X50	INSTRUMENT	27V513T		16419090
SPRING	268473	SPRING CRT	INSTRUMENT	24F512T		67-X21679-0E0
SPRING	268474	SPRING	INSTRUMENT	24F512T		67-X24970-0E0
SPRING	267130	SPRING, POWER SWITCH	INSTRUMENT	24V511T		67-X25045-0E0
SPRING	268460	SPRING CRT 6X50	INSTRUMENT	27V520T		16419090
SPRING	268489	SPRING CRT 6MMX50M	INSTRUMENT	24V511T		35797560
SUPPORT	258018	CLIP, DEGAUSSING COIL SUPPORT	INSTRUMENT	27V512T		25497140
SUPPORT	257992	SUPPORT, FPA	INSTRUMENT	27V512T	S	2557125A
SUPPORT	268498	SUPPORT FCB	INSTRUMENT	27V512T	S	25577950
SUPPORT	268461	SUPPORT FCB	INSTRUMENT	27V520T	S	25771020
SUPPORT	257992	SUPPORT, FPA	INSTRUMENT	27V520T	S	2557125A
SUPPORT	258018	CLIP, DEGAUSSING COIL SUPPORT	INSTRUMENT	27V520T		25497140
SUPPORT	257992	SUPPORT, FPA	INSTRUMENT	27F520T	S	2557125A
SUPPORT	268461	SUPPORT FCB	INSTRUMENT	27F520T	S	25771020
SUPPORT	258018	CLIP, DEGAUSSING COIL SUPPORT	INSTRUMENT	27V513T		25497140
SUPPORT	268475	CRT SUPPORT	INSTRUMENT	24F512T		62-389500-1UN
SUPPORT	263528	HOUSING FOR FRONT A/V CBA	INSTRUMENT	27F630T	S	2566857A
SUPPORT	268498	SUPPORT FCB	INSTRUMENT	27V513T	S	25577950
SUPPORT	257992	SUPPORT, FPA	INSTRUMENT	27V513T	S	2557125A
T401	266291	TRANSFOR HOR. DRIVE (MAGNETIC	ELECTRICAL COMPONENTS	27V513T		36-HDR001-AX1
T401	266291	TRANSFOR HOR. DRIVE (MAGNETIC	ELECTRICAL COMPONENTS	27V512T		36-HDR001-AX1
T401	266291	TRANSFOR HOR. DRIVE (MAGNETIC	ELECTRICAL COMPONENTS	27V520T		36-HDR001-AX1

Symbol	Stock	Description	Circuit	Model	TypeCode	Drawing
T401	266291	TRANSFOR HOR. DRIVE (MAGNETIC	ELECTRICAL COMPONENTS	27F520T		36-HDR001-AX1
T401	266291	TRANSFOR HOR. DRIVE (MAGNETIC	ELECTRICAL COMPONENTS	24V511T		36-HDR001-AX1
T401	266291	TRANSFOR HOR. DRIVE (MAGNETIC	ELECTRICAL COMPONENTS	27F630T		36-HDR001-AX1
T401	266291	TRANSFOR HOR. DRIVE (MAGNETIC	ELECTRICAL COMPONENTS	24F512T		36-HDR001-AX1
T402	268419	FBT BSC27-0101Q	ELECTRICAL COMPONENTS	24F512T	S	37-FCA001-EAA2A
T402	268419	FBT BSC27-0101Q	ELECTRICAL COMPONENTS	27V512T	S	37-FCA001-EAA2A
T402	268419	FBT BSC27-0101Q	ELECTRICAL COMPONENTS	27V520T	S	37-FCA001-EAA2A
T402	268419	FBT BSC27-0101Q	ELECTRICAL COMPONENTS	27F630T	S	37-FCA001-EAA2A
T402	268419	FBT BSC27-0101Q	ELECTRICAL COMPONENTS	24V511T		37-FCA001-EAA2A
T402	268419	FBT BSC27-0101Q	ELECTRICAL COMPONENTS	27F520T	S	37-FCA001-EAA2A
T402	268419	FBT BSC27-0101Q	ELECTRICAL COMPONENTS	27V513T	S	37-FCA001-EAA2A
T801	268420	POWER LIFTER 10MH LCL-2802B	ELECTRICAL COMPONENTS	27F630T	S	36-LIF007-XX0
T801	268420	POWER LIFTER 10MH LCL-2802B	ELECTRICAL COMPONENTS	27F520T	S	36-LIF007-XX0
T801	268420	POWER LIFTER 10MH LCL-2802B	ELECTRICAL COMPONENTS	24F512T	S	36-LIF007-XX0
T801	268420	POWER LIFTER 10MH LCL-2802B	ELECTRICAL COMPONENTS	24V511T		36-LIF007-XX0
T801	268420	POWER LIFTER 10MH LCL-2802B	ELECTRICAL COMPONENTS	27V520T	S	36-LIF007-XX0
T801	268420	POWER LIFTER 10MH LCL-2802B	ELECTRICAL COMPONENTS	27V512T	S	36-LIF007-XX0
T801	268420	POWER LIFTER 10MH LCL-2802B	ELECTRICAL COMPONENTS	27V513T	S	36-LIF007-XX0
T802	268420	POWER LIFTER 10MH LCL-2802B	ELECTRICAL COMPONENTS	27V513T	S	36-LIF007-XX0
T802	268420	POWER LIFTER 10MH LCL-2802B	ELECTRICAL COMPONENTS	27F520T	S	36-LIF007-XX0
T802	268420	POWER LIFTER 10MH LCL-2802B	ELECTRICAL COMPONENTS	27F630T	S	36-LIF007-XX0
T802	268420	POWER LIFTER 10MH LCL-2802B	ELECTRICAL COMPONENTS	24F512T	S	36-LIF007-XX0
T802	268420	POWER LIFTER 10MH LCL-2802B	ELECTRICAL COMPONENTS	27V520T	S	36-LIF007-XX0
T802	268420	POWER LIFTER 10MH LCL-2802B	ELECTRICAL COMPONENTS	24V511T		36-LIF007-XX0
T802	268420	POWER LIFTER 10MH LCL-2802B	ELECTRICAL COMPONENTS	27V512T	S	36-LIF007-XX0
T803	268421	TRANSFORMER CONV. BCK-4201-78	ELECTRICAL COMPONENTS	27F520T	S	36-TRF140-AX0
T803	268421	TRANSFORMER CONV. BCK-4201-78	ELECTRICAL COMPONENTS	27V520T	S	36-TRF140-AX0
T803	268421	TRANSFORMER CONV. BCK-4201-78	ELECTRICAL COMPONENTS	24V511T		36-TRF140-AX0
T803	268421	TRANSFORMER CONV. BCK-4201-78	ELECTRICAL COMPONENTS	27V512T	S	36-TRF140-AX0
T803	268421	TRANSFORMER CONV. BCK-4201-78	ELECTRICAL COMPONENTS	24F512T	S	36-TRF140-AX0
T803	268421	TRANSFORMER CONV. BCK-4201-78	ELECTRICAL COMPONENTS	27V513T	S	36-TRF140-AX0
T803	268421	TRANSFORMER CONV. BCK-4201-78	ELECTRICAL COMPONENTS	27F630T	S	36-TRF140-AX0
TU101	266310	TUNER	ELECTRICAL COMPONENTS	27V513T		07-457FF5-NX8
TU101	266310	TUNER	ELECTRICAL COMPONENTS	24V511T		07-457FF5-NX8
TU101	266310	TUNER	ELECTRICAL COMPONENTS	27V520T		07-457FF5-NX8
TU101	266310	TUNER	ELECTRICAL COMPONENTS	24F512T		07-457FF5-NX8
TU101	266310	TUNER	ELECTRICAL COMPONENTS	27F630T		07-457FF5-NX8
TU101	266310	TUNER	ELECTRICAL COMPONENTS	27F520T		07-457FF5-NX8
TU101	266310	TUNER	ELECTRICAL COMPONENTS	27V512T		07-457FF5-NX8
VR802	268422	TRIMMER B2K HORIZ TYPE	ELECTRICAL COMPONENTS	27F630T		20-TR202H-5CX
VR802	268422	TRIMMER B2K HORIZ TYPE	ELECTRICAL COMPONENTS	27V512T		20-TR202H-5CX
VR802	268422	TRIMMER B2K HORIZ TYPE	ELECTRICAL COMPONENTS	24F512T		20-TR202H-5CX
VR802	268422	TRIMMER B2K HORIZ TYPE	ELECTRICAL COMPONENTS	24V511T		20-TR202H-5CX
VR802	268422	TRIMMER B2K HORIZ TYPE	ELECTRICAL COMPONENTS	27F520T		20-TR202H-5CX
VR802	268422	TRIMMER B2K HORIZ TYPE	ELECTRICAL COMPONENTS	27V520T		20-TR202H-5CX
VR802	268422	TRIMMER B2K HORIZ TYPE	ELECTRICAL COMPONENTS	27V513T		20-TR202H-5CX
WASHER	268490	WASHER 3.5MMX15	INSTRUMENT	24V511T		35797920
WASHER	268476	WASHER 6 X 20 X 2MM	INSTRUMENT	24F512T		65-A60200-20E
WIRE	268462	CRT GND WIRE	INSTRUMENT	27F520T		16452340
WIRE	268499	CRT GND WIRE	INSTRUMENT	27V513T		16419050
WIRE	268499	CRT GND WIRE	INSTRUMENT	27V512T		16419050
WIRE	268491	ASSY CRT GND WI	INSTRUMENT	24V511T		60128420
WIRE	268462	CRT GND WIRE	INSTRUMENT	27F630T		16452340
WIRE	268477	CRT GND WIRE & HOUSE	INSTRUMENT	24F512T		02-GND025-XX3
WIRE	268499	CRT GND WIRE	INSTRUMENT	27V520T		16419050
X001	266315	CRYSTAL 8.0MHZ	ELECTRICAL COMPONENTS	24V511T		45-OSC8M0-0Y0
X001	266315	CRYSTAL 8.0MHZ	ELECTRICAL COMPONENTS	27V520T		45-OSC8M0-0Y0
X001	266315	CRYSTAL 8.0MHZ	ELECTRICAL COMPONENTS	27F520T		45-OSC8M0-0Y0
X001	266315	CRYSTAL 8.0MHZ	ELECTRICAL COMPONENTS	24F512T		45-OSC8M0-0Y0
X001	266315	CRYSTAL 8.0MHZ	ELECTRICAL COMPONENTS	27F630T		45-OSC8M0-0Y0

Symbol	Stock	Description	Circuit	Model	TypeCode	Drawing
X001	266315	CRYSTAL 8.0MHZ	ELECTRICAL COMPONENTS	27V512T		45-OSC8M0-0Y0
X001	266315	CRYSTAL 8.0MHZ	ELECTRICAL COMPONENTS	27V513T		45-OSC8M0-0Y0
X1001	268423	CRYSTAL 18.432M	ELECTRICAL COMPONENTS	27F630T		45-OSC18M-4Y0
X1001	268423	CRYSTAL 18.432M	ELECTRICAL COMPONENTS	24F512T		45-OSC18M-4Y0
X1001	268423	CRYSTAL 18.432M	ELECTRICAL COMPONENTS	27F520T		45-OSC18M-4Y0
X1001	268423	CRYSTAL 18.432M	ELECTRICAL COMPONENTS	27V512T		45-OSC18M-4Y0
X1001	268423	CRYSTAL 18.432M	ELECTRICAL COMPONENTS	24V511T		45-OSC18M-4Y0
X1001	268423	CRYSTAL 18.432M	ELECTRICAL COMPONENTS	27V513T		45-OSC18M-4Y0
X1001	268423	CRYSTAL 18.432M	ELECTRICAL COMPONENTS	27V520T		45-OSC18M-4Y0
X201	266318	CER TRAP TPS 4.5MHZ	ELECTRICAL COMPONENTS	27F630T		45-TRA4M5-0Y0
X201	266318	CER TRAP TPS 4.5MHZ	ELECTRICAL COMPONENTS	24V511T		45-TRA4M5-0Y0
X201	266318	CER TRAP TPS 4.5MHZ	ELECTRICAL COMPONENTS	27V513T		45-TRA4M5-0Y0
X201	266318	CER TRAP TPS 4.5MHZ	ELECTRICAL COMPONENTS	24F512T		45-TRA4M5-0Y0
X201	266318	CER TRAP TPS 4.5MHZ	ELECTRICAL COMPONENTS	27V520T		45-TRA4M5-0Y0
X201	266318	CER TRAP TPS 4.5MHZ	ELECTRICAL COMPONENTS	27F520T		45-TRA4M5-0Y0
X201	266318	CER TRAP TPS 4.5MHZ	ELECTRICAL COMPONENTS	27V512T		45-TRA4M5-0Y0
X202	266317	CERAMIC FILTER	ELECTRICAL COMPONENTS	24F512T		45-FIL4M5-0Y1
X202	266317	CERAMIC FILTER	ELECTRICAL COMPONENTS	24V511T		45-FIL4M5-0Y1
X202	266317	CERAMIC FILTER	ELECTRICAL COMPONENTS	27F520T		45-FIL4M5-0Y1
X202	266317	CERAMIC FILTER	ELECTRICAL COMPONENTS	27F630T		45-FIL4M5-0Y1
X202	266317	CERAMIC FILTER	ELECTRICAL COMPONENTS	27V512T		45-FIL4M5-0Y1
X202	266317	CERAMIC FILTER	ELECTRICAL COMPONENTS	27V513T		45-FIL4M5-0Y1
X202	266317	CERAMIC FILTER	ELECTRICAL COMPONENTS	27V520T		45-FIL4M5-0Y1
Z101	266319	SAW FILTER	ELECTRICAL COMPONENTS	27F520T		45-SAWF18-590
Z101	266319	SAW FILTER	ELECTRICAL COMPONENTS	27V520T		45-SAWF18-590
Z101	266319	SAW FILTER	ELECTRICAL COMPONENTS	27V512T		45-SAWF18-590
Z101	266319	SAW FILTER	ELECTRICAL COMPONENTS	24F512T		45-SAWF18-590
Z101	266319	SAW FILTER	ELECTRICAL COMPONENTS	27V513T		45-SAWF18-590
Z101	266319	SAW FILTER	ELECTRICAL COMPONENTS	24V511T		45-SAWF18-590
Z101	266319	SAW FILTER	ELECTRICAL COMPONENTS	27F630T		45-SAWF18-590

AUDIO SCHEMATIC

SCHEMATIC NOTES
1. RESISTANCE VALUES ARE IN OHMS; K=X1000, Meg=X1,000,000.
RESISTORS ARE 0.250W OR LESS 5%, EXCEPT WHERE INDICATED.
[ ] INDICATES FLAT MAXI-CHIP COMPONENT, 1/8W EXCEPT WHERE INDICATED.
/ \ INDICATES FLAT MINI-CHIP COMPONENT, 1/16W EXCEPT WHERE INDICATED.
2. CAPACITANCE VALUES 1.0 AND ABOVE ARE IN pF, VALUES BELOW 1.0 ARE IN Fp
EXCEPT WHERE INDICATED. VOLTAGE RATING IS 50V EXCEPT WHERE INDICATED.
[ ] INDICATES FLAT MAXI-CHIP COMPONENT.
/ \ INDICATES FLAT MINI-CHIP COMPONENT.
\ / INDICATES FLAT MINI-CHIP COMPONENT.
3. ⏚ DENOTES CHASSIS GROUND. ⊗ INDICATES CONNECTION VIA POINT-TO-POINT WIRE.
⏚ DENOTES ISOLATED GROUND.
–INDICATES JUMPER WIRE.
–INDICATES ZERO OHM CHIP COMPONENT.

ALL INTEGRATED CIRCUITS AND MANY OTHER SEMICONDUCTORS ARE ELECTROSTATICALLY SENSITIVE AND REQUIRE SPECIAL HANDLING TECHNIQUES DESCRIBED UNDER "ELECTROSTATICALLY SENSITIVE (ES) DEVICES" IN THE SAFETY AND SERVICING PRECAUTIONS PUBLICATION.

PRODUCT SAFETY NOTE
COMPONENTS WITH A ⚠ HAVE SPECIAL CHARACTERISTICS IMPORTANT TO SAFETY. BEFORE REPLACING ANY OF THESE COMPONENTS READ CAREFULLY THE PRODUCT SAFETY NOTICE IN THIS SERVICE DATA. DO NOT DEGRADE THE SAFETY OF THE SET THROUGH IMPROPER SERVICING.

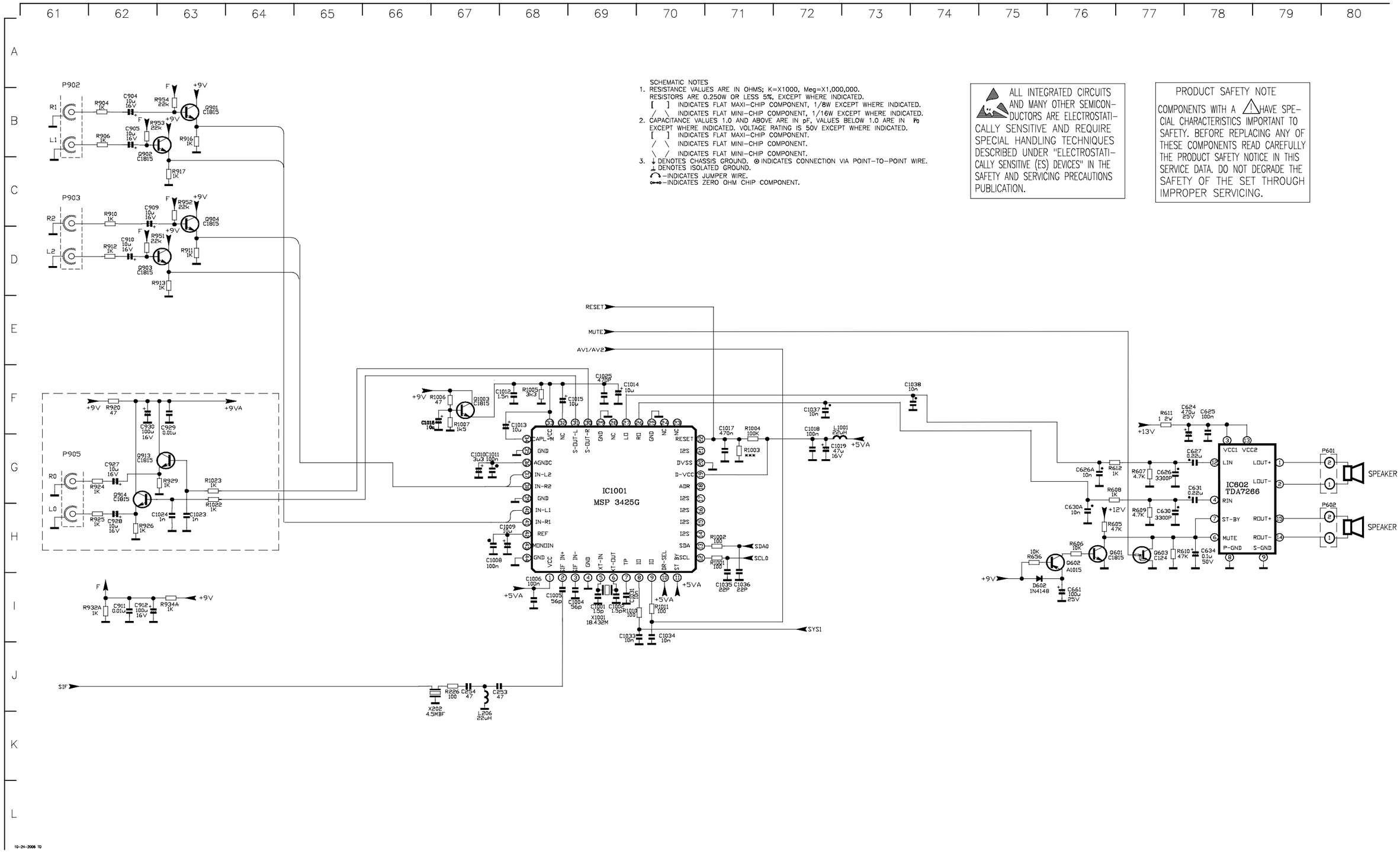

Page 9–4

COMB FILTER SCHEMATIC

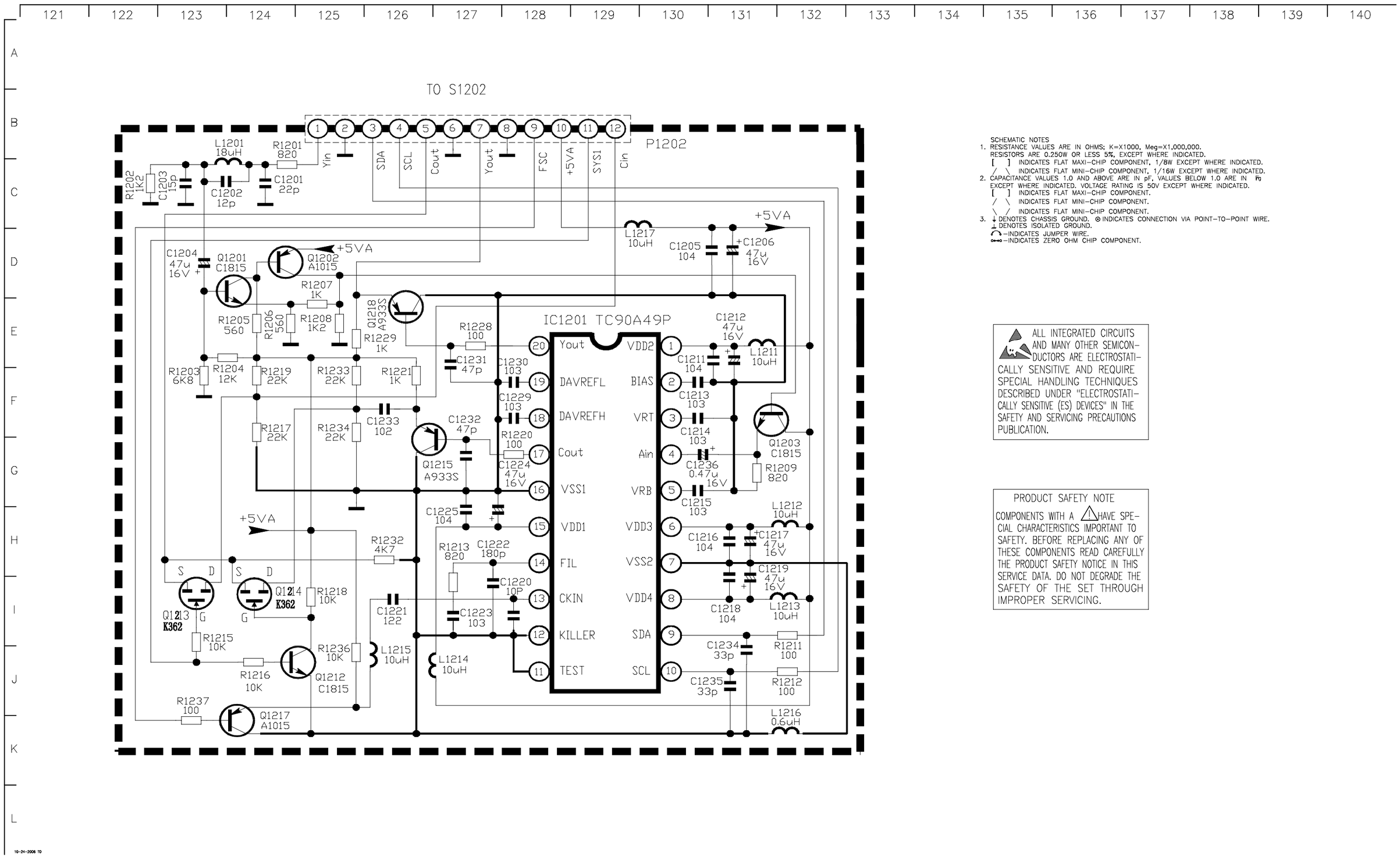

SCHEMATIC NOTES

1. RESISTANCE VALUES ARE IN OHMS; K=X1000, Meg=X1,000,000.
   RESISTORS ARE 0.250W OR LESS 5%, EXCEPT WHERE INDICATED.
   [ ] INDICATES FLAT MAXI-CHIP COMPONENT, 1/8W EXCEPT WHERE INDICATED.
   / \ INDICATES FLAT MINI-CHIP COMPONENT, 1/16W EXCEPT WHERE INDICATED.
2. CAPACITANCE VALUES 1.0 AND ABOVE ARE IN pF, VALUES BELOW 1.0 ARE IN µF
   EXCEPT WHERE INDICATED. VOLTAGE RATING IS 50V EXCEPT WHERE INDICATED.
   [ ] INDICATES FLAT MAXI-CHIP COMPONENT.
   / \ INDICATES FLAT MINI-CHIP COMPONENT.
   \ / INDICATES FLAT MINI-CHIP COMPONENT.
3. ⏚ DENOTES CHASSIS GROUND. ⊙ INDICATES CONNECTION VIA POINT-TO-POINT WIRE.
   ⊥ DENOTES ISOLATED GROUND.
   ⌒ -INDICATES JUMPER WIRE.
   ⊶ -INDICATES ZERO OHM CHIP COMPONENT.

⚠ ALL INTEGRATED CIRCUITS AND MANY OTHER SEMICONDUCTORS ARE ELECTROSTATICALLY SENSITIVE AND REQUIRE SPECIAL HANDLING TECHNIQUES DESCRIBED UNDER "ELECTROSTATICALLY SENSITIVE (ES) DEVICES" IN THE SAFETY AND SERVICING PRECAUTIONS PUBLICATION.

PRODUCT SAFETY NOTE

COMPONENTS WITH A ⚠ HAVE SPECIAL CHARACTERISTICS IMPORTANT TO SAFETY. BEFORE REPLACING ANY OF THESE COMPONENTS READ CAREFULLY THE PRODUCT SAFETY NOTICE IN THIS SERVICE DATA. DO NOT DEGRADE THE SAFETY OF THE SET THROUGH IMPROPER SERVICING.

10-24-2006 TO

Page 9-7

CRT DRIVE SCHEMATIC

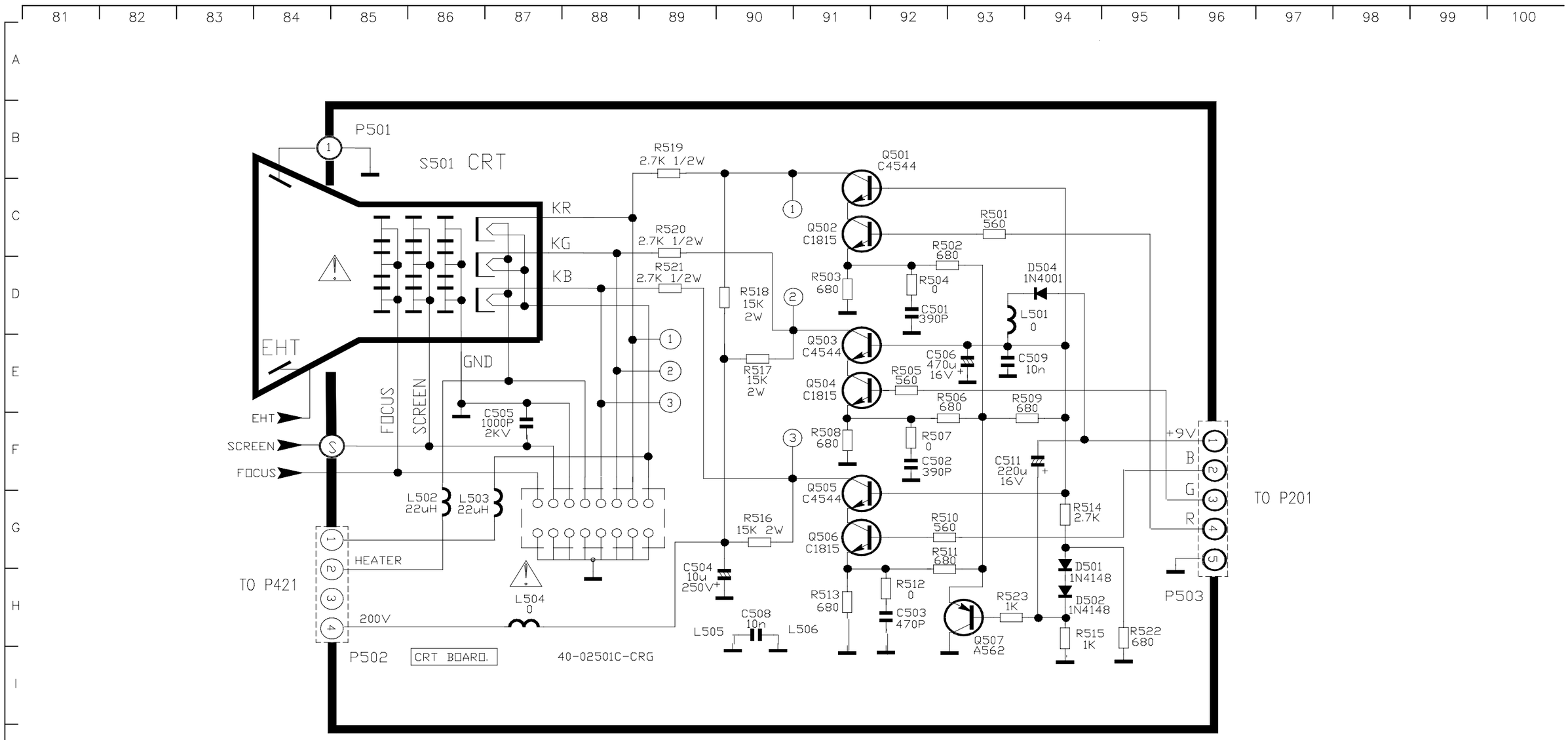

SCHEMATIC NOTES

1. RESISTANCE VALUES ARE IN OHMS; K=X1000, Meg=X1,000,000.
   RESISTORS ARE 0.250W OR LESS 5%, EXCEPT WHERE INDICATED.
   [ ] INDICATES FLAT MAXI-CHIP COMPONENT, 1/8W EXCEPT WHERE INDICATED.
   / \ INDICATES FLAT MINI-CHIP COMPONENT, 1/16W EXCEPT WHERE INDICATED.
2. CAPACITANCE VALUES 1.0 AND ABOVE ARE IN pF, VALUES BELOW 1.0 ARE IN Fp
   EXCEPT WHERE INDICATED. VOLTAGE RATING IS 50V EXCEPT WHERE INDICATED.
   [ ] INDICATES FLAT MAXI-CHIP COMPONENT.
   / \ INDICATES FLAT MINI-CHIP COMPONENT.
   \ / INDICATES FLAT MINI-CHIP COMPONENT.
3. ⏚ DENOTES CHASSIS GROUND. ⊙ INDICATES CONNECTION VIA POINT-TO-POINT WIRE.
   ⊥ DENOTES ISOLATED GROUND.
   —INDICATES JUMPER WIRE.
   —INDICATES ZERO OHM CHIP COMPONENT.

ALL INTEGRATED CIRCUITS AND MANY OTHER SEMICONDUCTORS ARE ELECTROSTATICALLY SENSITIVE AND REQUIRE SPECIAL HANDLING TECHNIQUES DESCRIBED UNDER "ELECTROSTATICALLY SENSITIVE (ES) DEVICES" IN THE SAFETY AND SERVICING PRECAUTIONS PUBLICATION.

PRODUCT SAFETY NOTE

COMPONENTS WITH A ⚠ HAVE SPECIAL CHARACTERISTICS IMPORTANT TO SAFETY. BEFORE REPLACING ANY OF THESE COMPONENTS READ CAREFULLY THE PRODUCT SAFETY NOTICE IN THIS SERVICE DATA. DO NOT DEGRADE THE SAFETY OF THE SET THROUGH IMPROPER SERVICING.

10-24-2006 TO

Page 9-5

DEFLECTION SCHEMATIC

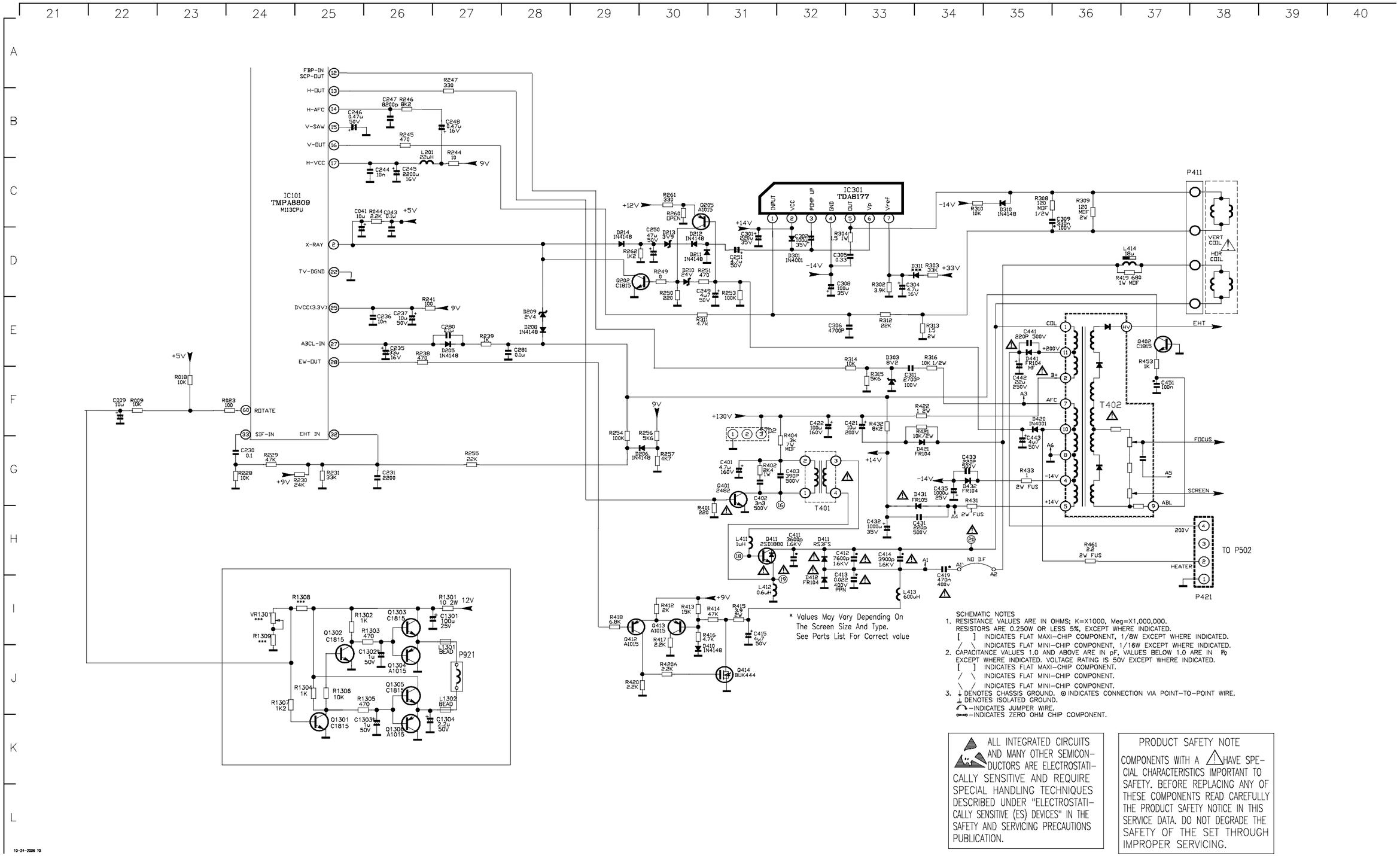

SCHEMATIC NOTES

1. RESISTANCE VALUES ARE IN OHMS; K=X1000, Meg=X1,000,000.
   RESISTORS ARE 0.250W OR LESS 5%, EXCEPT WHERE INDICATED.
   [ ] INDICATES FLAT MAXI-CHIP COMPONENT, 1/8W EXCEPT WHERE INDICATED.
   / \ INDICATES FLAT MINI-CHIP COMPONENT, 1/16W EXCEPT WHERE INDICATED.
2. CAPACITANCE VALUES 1.0 AND ABOVE ARE IN pF, VALUES BELOW 1.0 ARE IN F
   EXCEPT WHERE INDICATED. VOLTAGE RATING IS 50V EXCEPT WHERE INDICATED.
   [ ] INDICATES FLAT MAXI-CHIP COMPONENT.
   / \ INDICATES FLAT MINI-CHIP COMPONENT.
   \ / INDICATES FLAT MINI-CHIP COMPONENT.
3. ⏚ DENOTES CHASSIS GROUND. ⊗ INDICATES CONNECTION VIA POINT-TO-POINT WIRE.
   ⊥ DENOTES ISOLATED GROUND.
   ⌒ -INDICATES JUMPER WIRE.
   ⊶ -INDICATES ZERO OHM CHIP COMPONENT.

⚠ ALL INTEGRATED CIRCUITS AND MANY OTHER SEMICONDUCTORS ARE ELECTROSTATICALLY SENSITIVE AND REQUIRE SPECIAL HANDLING TECHNIQUES DESCRIBED UNDER "ELECTROSTATICALLY SENSITIVE (ES) DEVICES" IN THE SAFETY AND SERVICING PRECAUTIONS PUBLICATION.

PRODUCT SAFETY NOTE

COMPONENTS WITH A ⚠ HAVE SPECIAL CHARACTERISTICS IMPORTANT TO SAFETY. BEFORE REPLACING ANY OF THESE COMPONENTS READ CAREFULLY THE PRODUCT SAFETY NOTICE IN THIS SERVICE DATA. DO NOT DEGRADE THE SAFETY OF THE SET THROUGH IMPROPER SERVICING.

10-24-2006 10

Page 9-2

IC101 PINOUTS SCHEMATIC

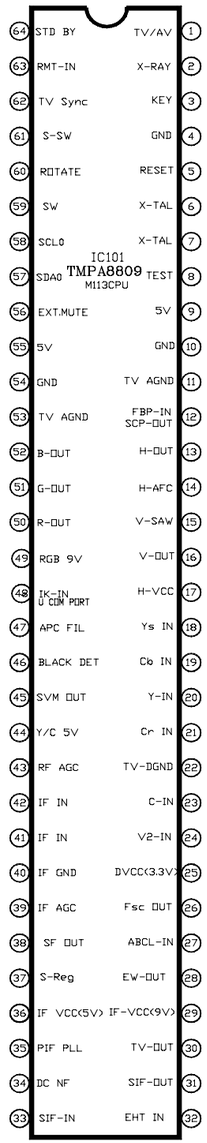

SCHEMATIC NOTES

1. RESISTANCE VALUES ARE IN OHMS; K=X1000, Meg=X1,000,000.
   RESISTORS ARE 0.250W OR LESS 5%, EXCEPT WHERE INDICATED.
   [ ] INDICATES FLAT MAXI-CHIP COMPONENT, 1/8W EXCEPT WHERE INDICATED.
   / \ INDICATES FLAT MINI-CHIP COMPONENT, 1/16W EXCEPT WHERE INDICATED.
2. CAPACITANCE VALUES 1.0 AND ABOVE ARE IN pF, VALUES BELOW 1.0 ARE IN F,
   EXCEPT WHERE INDICATED. VOLTAGE RATING IS 50V EXCEPT WHERE INDICATED.
   [ ] INDICATES FLAT MAXI-CHIP COMPONENT.
   / \ INDICATES FLAT MINI-CHIP COMPONENT.
   \ / INDICATES FLAT MINI-CHIP COMPONENT.
3. ⏚ DENOTES CHASSIS GROUND. ⊙ INDICATES CONNECTION VIA POINT-TO-POINT WIRE.
   ⊥ DENOTES ISOLATED GROUND.
   ⌒ -INDICATES JUMPER WIRE.
   ⊶ -INDICATES ZERO OHM CHIP COMPONENT.

ALL INTEGRATED CIRCUITS AND MANY OTHER SEMICONDUCTORS ARE ELECTROSTATICALLY SENSITIVE AND REQUIRE SPECIAL HANDLING TECHNIQUES DESCRIBED UNDER "ELECTROSTATICALLY SENSITIVE (ES) DEVICES" IN THE SAFETY AND SERVICING PRECAUTIONS PUBLICATION.

PRODUCT SAFETY NOTE

COMPONENTS WITH A ⚠ HAVE SPECIAL CHARACTERISTICS IMPORTANT TO SAFETY. BEFORE REPLACING ANY OF THESE COMPONENTS READ CAREFULLY THE PRODUCT SAFETY NOTICE IN THIS SERVICE DATA. DO NOT DEGRADE THE SAFETY OF THE SET THROUGH IMPROPER SERVICING.

8-30-2005 TO

Page 9-8

FRONT PANEL/IR SCHEMATIC

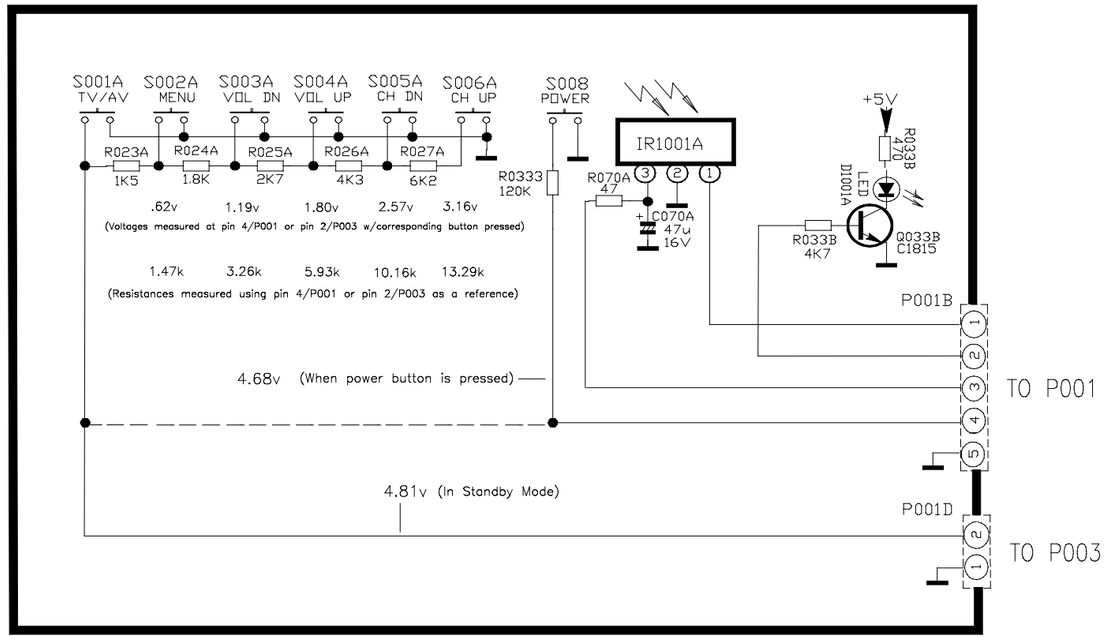

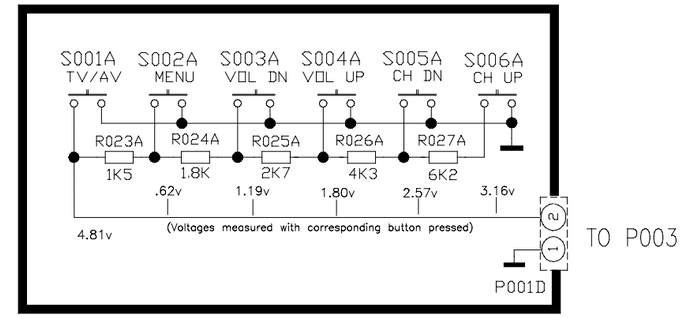

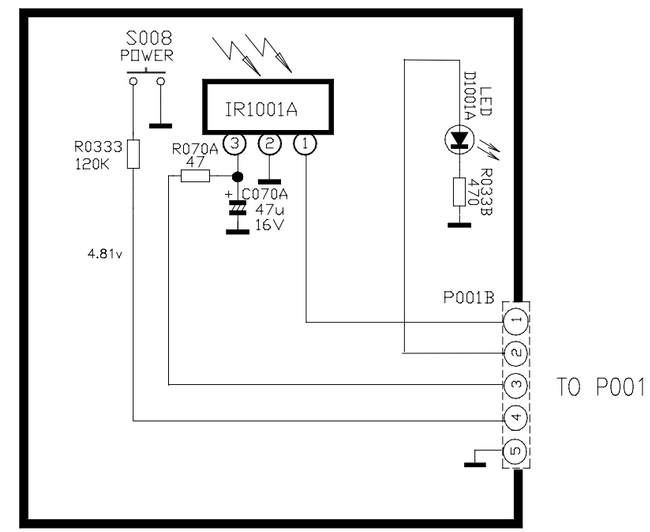

SCHEMATIC NOTES

1. RESISTANCE VALUES ARE IN OHMS; K=X1000, Meg=X1,000,000.
   RESISTORS ARE 0.250W OR LESS 5%, EXCEPT WHERE INDICATED.
   [ ] INDICATES FLAT MAXI-CHIP COMPONENT, 1/8W EXCEPT WHERE INDICATED.
   / \ INDICATES FLAT MINI-CHIP COMPONENT, 1/16W EXCEPT WHERE INDICATED.
2. CAPACITANCE VALUES 1.0 AND ABOVE ARE IN pF, VALUES BELOW 1.0 ARE IN F,
   EXCEPT WHERE INDICATED. VOLTAGE RATING IS 50V EXCEPT WHERE INDICATED.
   [ ] INDICATES FLAT MAXI-CHIP COMPONENT.
   / \ INDICATES FLAT MINI-CHIP COMPONENT.
   \ / INDICATES FLAT MINI-CHIP COMPONENT.
3. ⏚ DENOTES CHASSIS GROUND. ⊖ INDICATES CONNECTION VIA POINT-TO-POINT WIRE.
   ⊥ DENOTES ISOLATED GROUND.
   —INDICATES JUMPER WIRE.
   —INDICATES ZERO OHM CHIP COMPONENT.

ALL INTEGRATED CIRCUITS AND MANY OTHER SEMICONDUCTORS ARE ELECTROSTATICALLY SENSITIVE AND REQUIRE SPECIAL HANDLING TECHNIQUES DESCRIBED UNDER "ELECTROSTATICALLY SENSITIVE (ES) DEVICES" IN THE SAFETY AND SERVICING PRECAUTIONS PUBLICATION.

PRODUCT SAFETY NOTE

COMPONENTS WITH A ⚠ HAVE SPECIAL CHARACTERISTICS IMPORTANT TO SAFETY. BEFORE REPLACING ANY OF THESE COMPONENTS READ CAREFULLY THE PRODUCT SAFETY NOTICE IN THIS SERVICE DATA. DO NOT DEGRADE THE SAFETY OF THE SET THROUGH IMPROPER SERVICING.

10-24-2006 TD

Page 9-6

POWER SUPPLY SCHEMATIC

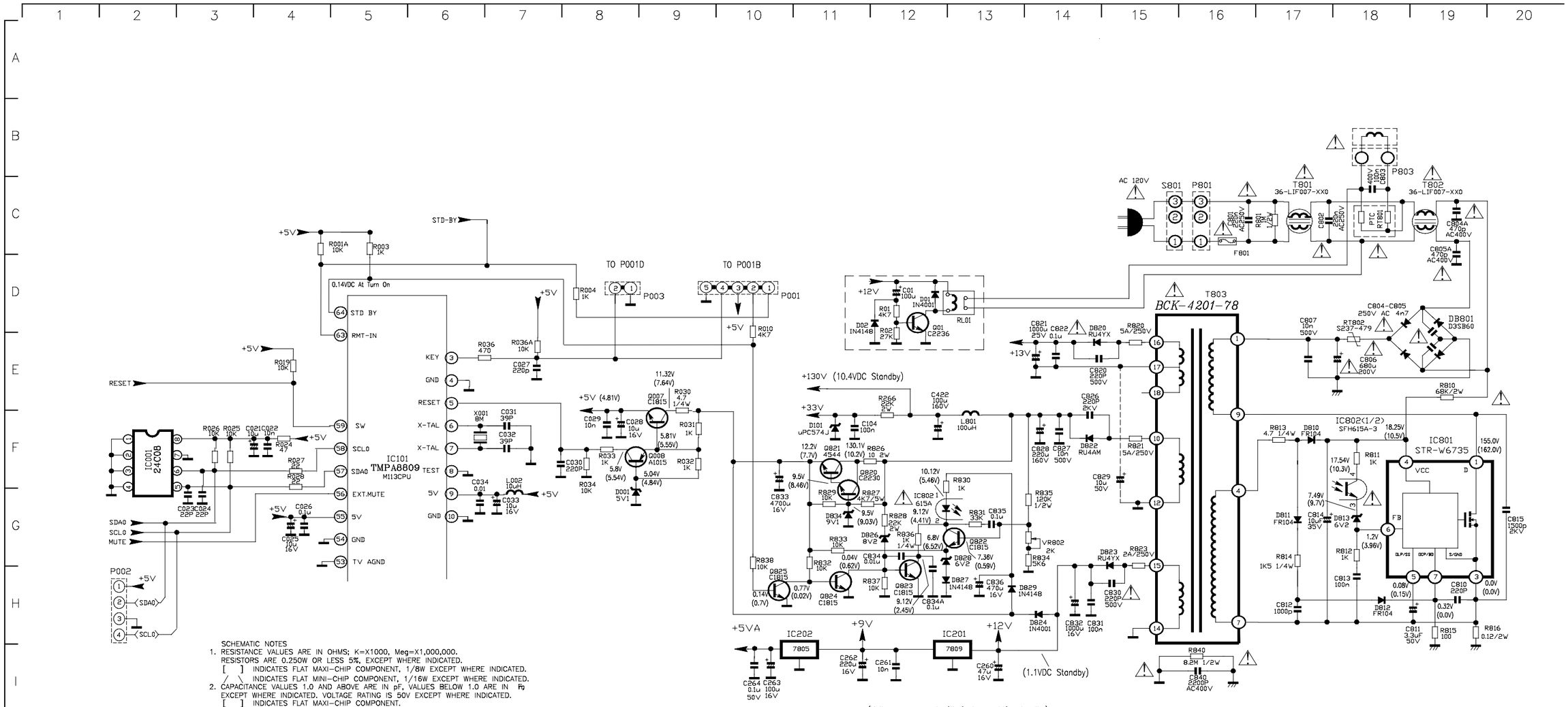

SCHEMATIC NOTES

1. RESISTANCE VALUES ARE IN OHMS; K=X1000, Meg=X1,000,000.
   RESISTORS ARE 0.250W OR LESS 5%, EXCEPT WHERE INDICATED.
   [ ] INDICATES FLAT MAXI-CHIP COMPONENT, 1/8W EXCEPT WHERE INDICATED.
   / \ INDICATES FLAT MINI-CHIP COMPONENT, 1/16W EXCEPT WHERE INDICATED.
2. CAPACITANCE VALUES 1.0 AND ABOVE ARE IN pF, VALUES BELOW 1.0 ARE IN Fp
   EXCEPT WHERE INDICATED. VOLTAGE RATING IS 50V EXCEPT WHERE INDICATED.
   [ ] INDICATES FLAT MAXI-CHIP COMPONENT.
   / \ INDICATES FLAT MINI-CHIP COMPONENT.
   \ / INDICATES FLAT MINI-CHIP COMPONENT.
3. ⏚ DENOTES CHASSIS GROUND. ⊙ INDICATES CONNECTION VIA POINT-TO-POINT WIRE.
   ⊥ DENOTES ISOLATED GROUND.
   —INDICATES JUMPER WIRE.
   —INDICATES ZERO OHM CHIP COMPONENT.

⚠ ALL INTEGRATED CIRCUITS AND MANY OTHER SEMICONDUCTORS ARE ELECTROSTATICALLY SENSITIVE AND REQUIRE SPECIAL HANDLING TECHNIQUES DESCRIBED UNDER "ELECTROSTATICALLY SENSITIVE (ES) DEVICES" IN THE SAFETY AND SERVICING PRECAUTIONS PUBLICATION.

PRODUCT SAFETY NOTE

COMPONENTS WITH A ⚠ HAVE SPECIAL CHARACTERISTICS IMPORTANT TO SAFETY. BEFORE REPLACING ANY OF THESE COMPONENTS READ CAREFULLY THE PRODUCT SAFETY NOTICE IN THIS SERVICE DATA. DO NOT DEGRADE THE SAFETY OF THE SET THROUGH IMPROPER SERVICING.

10-24-2006 TO

Page 9-1

VIDEO SCHEMATIC

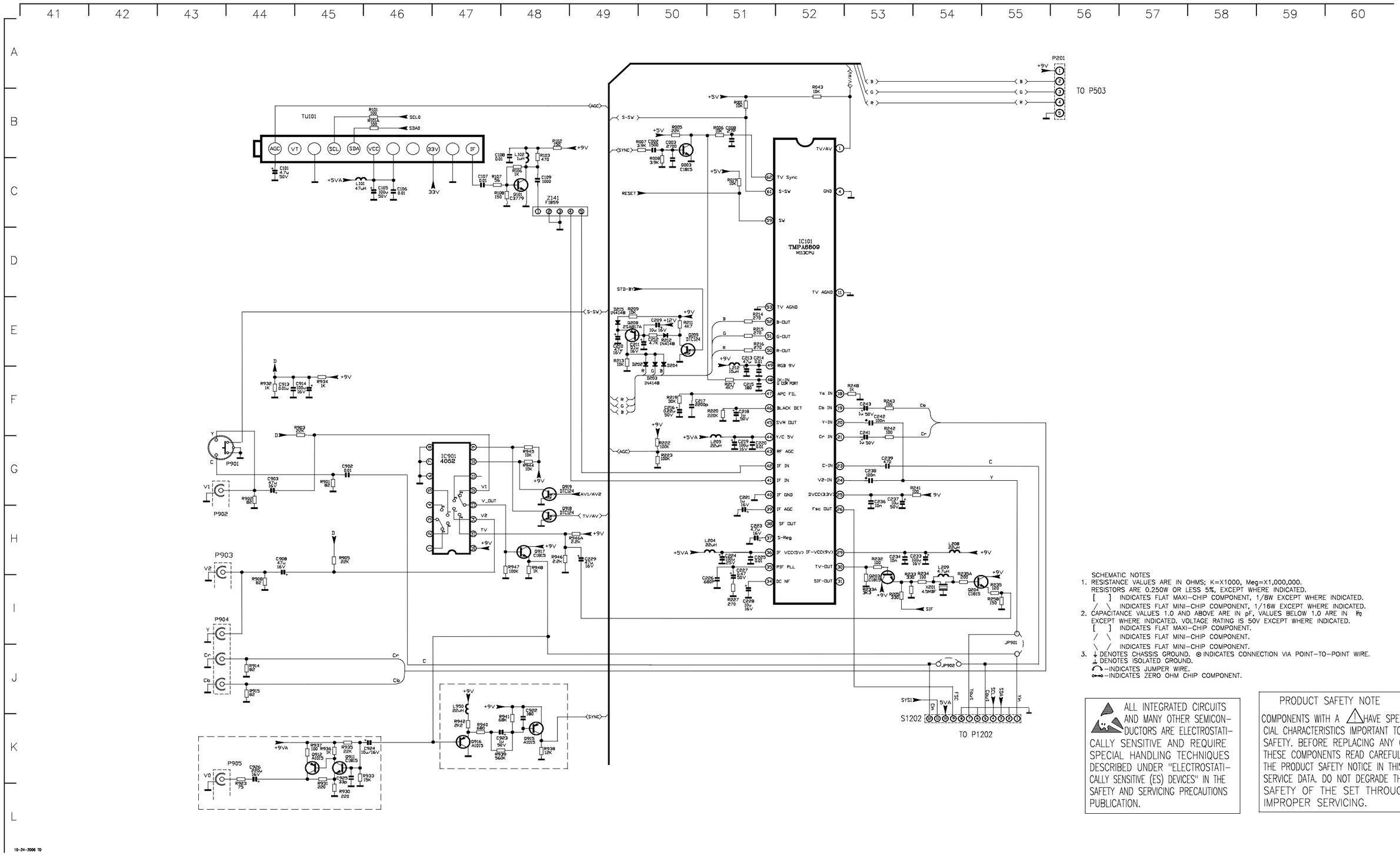

SCHEMATIC NOTES

1. RESISTANCE VALUES ARE IN OHMS; K=X1000, Meg=X1,000,000.
   RESISTORS ARE 0.250W OR LESS 5%, EXCEPT WHERE INDICATED.
   [ ] INDICATES FLAT MAXI-CHIP COMPONENT, 1/8W EXCEPT WHERE INDICATED.
   / \ INDICATES FLAT MINI-CHIP COMPONENT, 1/16W EXCEPT WHERE INDICATED.
2. CAPACITANCE VALUES 1.0 AND ABOVE ARE IN pF, VALUES BELOW 1.0 ARE IN µF
   EXCEPT WHERE INDICATED. VOLTAGE RATING IS 50V EXCEPT WHERE INDICATED.
   [ ] INDICATES FLAT MAXI-CHIP COMPONENT.
   / \ INDICATES FLAT MINI-CHIP COMPONENT.
   \ / INDICATES FLAT MINI-CHIP COMPONENT.
3. ⏚ DENOTES CHASSIS GROUND. ⊙ INDICATES CONNECTION VIA POINT-TO-POINT WIRE.
   ⊥ DENOTES ISOLATED GROUND.
   ⌒ -INDICATES JUMPER WIRE.
   ⊶ -INDICATES ZERO OHM CHIP COMPONENT.

ALL INTEGRATED CIRCUITS AND MANY OTHER SEMICONDUCTORS ARE ELECTROSTATICALLY SENSITIVE AND REQUIRE SPECIAL HANDLING TECHNIQUES DESCRIBED UNDER "ELECTROSTATICALLY SENSITIVE (ES) DEVICES" IN THE SAFETY AND SERVICING PRECAUTIONS PUBLICATION.

PRODUCT SAFETY NOTE

COMPONENTS WITH A ⚠ HAVE SPECIAL CHARACTERISTICS IMPORTANT TO SAFETY. BEFORE REPLACING ANY OF THESE COMPONENTS READ CAREFULLY THE PRODUCT SAFETY NOTICE IN THIS SERVICE DATA. DO NOT DEGRADE THE SAFETY OF THE SET THROUGH IMPROPER SERVICING.

10-24-2006 TO

Page 9-3

Chassis	Part Symbol	Defective Circuit	Symptom	solution
m134	None	System Control	Servicer installed replacement chassis but the parental lock was turned on, blocking all programming except for commercials. According to the customer instruction book the code was supposed to have been set to 0000. This wasn't the case.	Pressing the vol+ on the remote & ch+ on the FPA the password came up as 1111.
M134C	fpa	System Control	Connector (P001b) on replacement fpa is reversed. Set comes on as soon as you plug in, will not turn off and remote will not work.	reverse connector

Chassis	Part Symbol	Defective Circuit	Symptom	solution
M134C	D301	Vertical	Vertical problem. Small picture with retrace and foldover. Vertical IC replaced several weeks ago. Pin 6 of vertical IC IC301 should be 14v. Was negative .3v. Pin 3 should be -12. Was -.02v. D301 open circuit.	Replace IC301,D301 and C302

27F520T/27F630T/27V520T/27V512T/24F630T

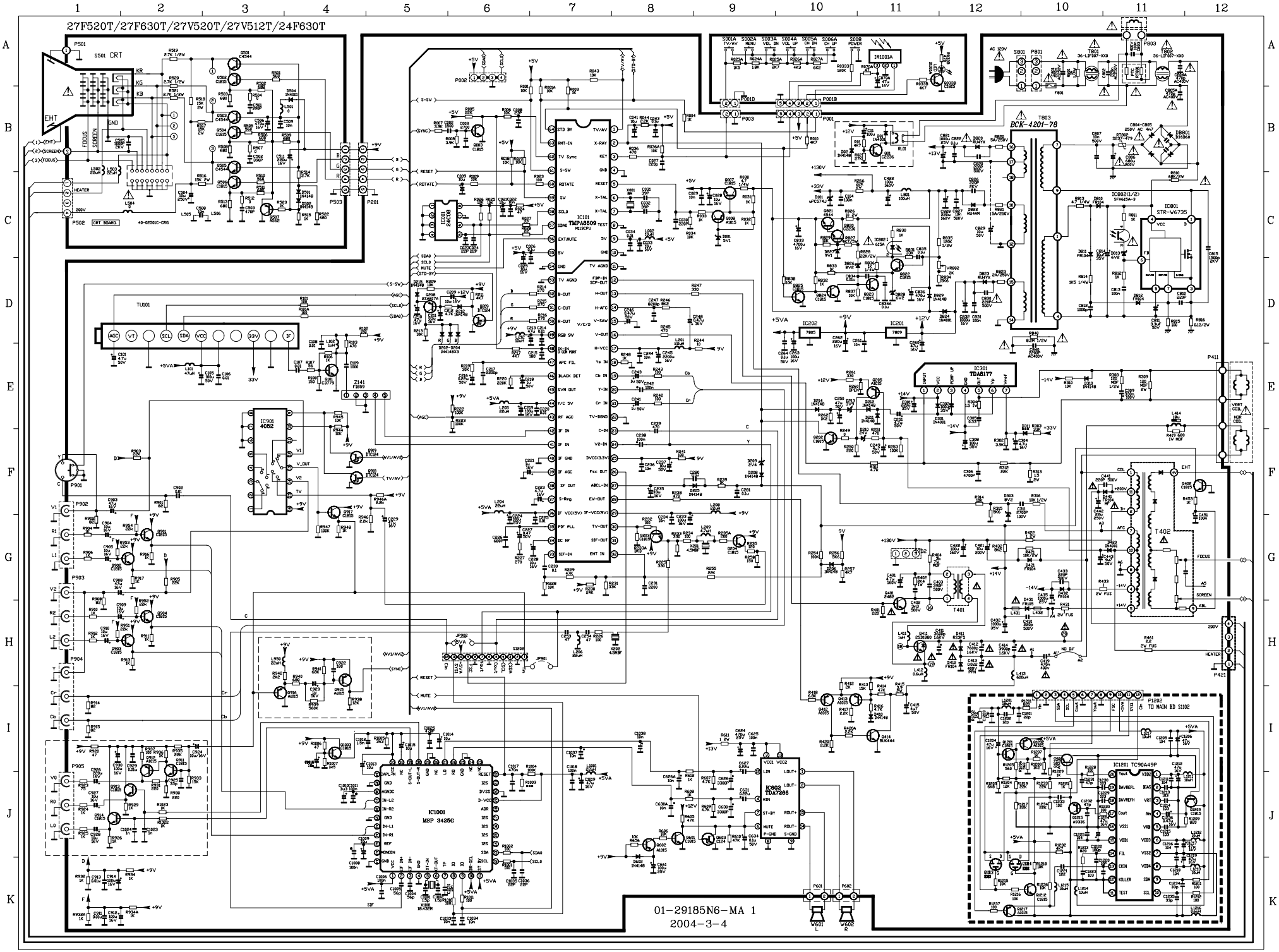

01-29185N6-MA 1
2004-3-4

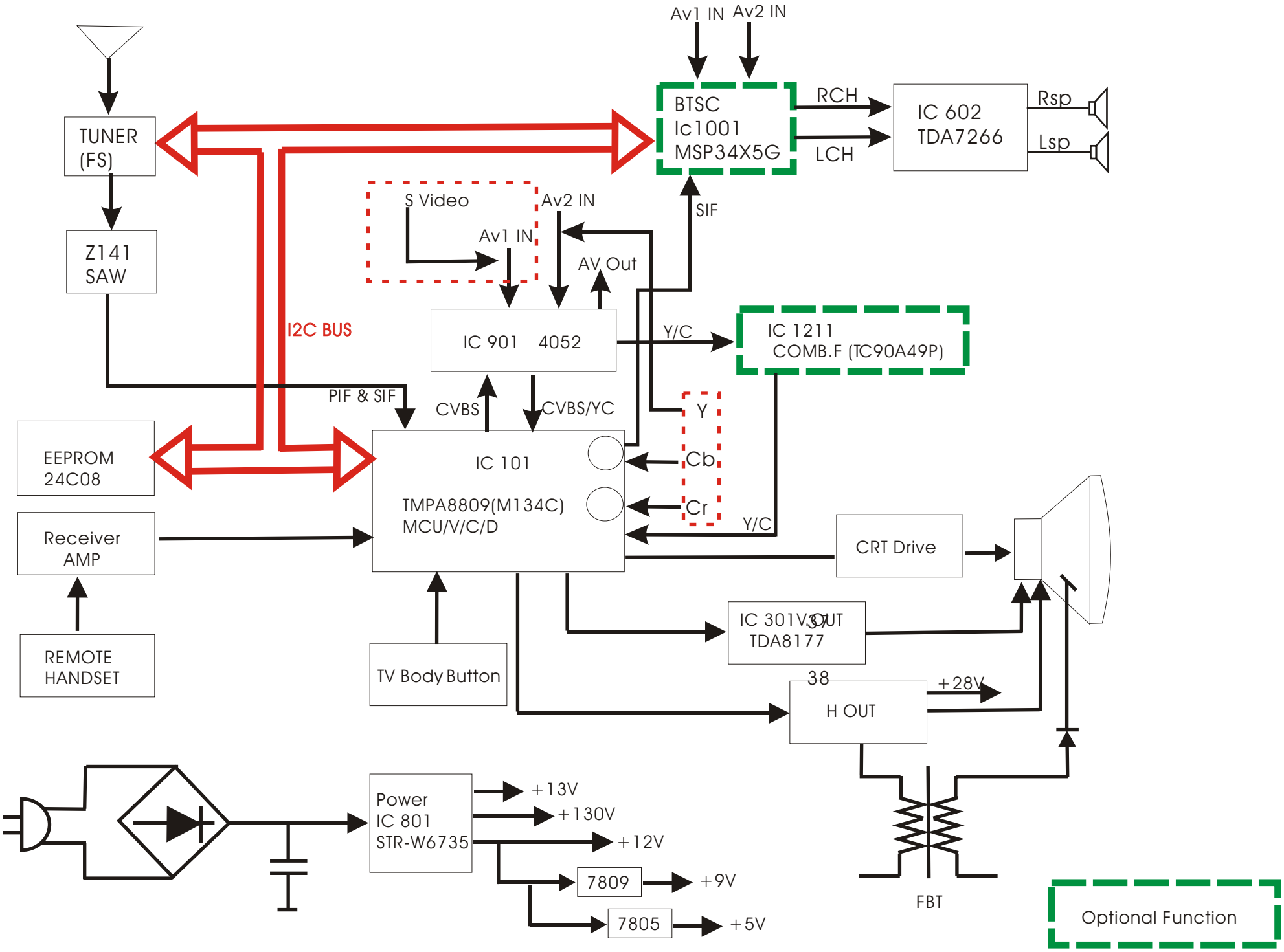
Av1 IN
Av2 IN
TUNER (FS)
BTSC Ic1001 MSP34X5G
RCH
LCH
IC 602 TDA7266
Rsp
Lsp
Z141 SAW
S Video
Av2 IN
Av1 IN
AV Out
SIF
I2C BUS
IC 901 4052
Y/C
IC 1211 COMB.F (TC90A49P)
PIF & SIF
CVBS
CVBS/YC
Y
Cb
Cr
Y/C
EEPROM 24C08
IC 101
TMPA8809(M134C) MCU/V/C/D
Receiver AMP
CRT Drive
REMOTE HANDSET
TV Body Button
IC 301V.OUT TDA8177
37
38
H OUT
+28V
Power IC 801 STR-W6735
+13V
+130V
+12V
7809
+9V
7805
+5V
FBT
Optional Function